MADE BY PROFESSIONAL

深圳市米拓实业有限公司

MATE TECHNOLOGY SHENZHEN LIMITED





Mate Technology Shenzhen Limited dedicate to serving clients with our rich experience and profession of know-how, strong control of quality, and innovation on our products. Clients' satisfaction is our main goal. We provide flexible, cost-effective solutions for demanding applications through rapid services. We will work closely with our clients from 0 to 1 and listen to all their thoughts throughout the whole case from concept to production. What we provide is not only products but also technics and services. We display details of how we work to back up what we are advocating with solid and hard proof, and never compromise with profession and credibility. Whatever your requirements, we will make sure everything is in sight with the highest level of accuracy. **Made by professional, made by Mate Technology.**

Thumb Size Joystick .....1 - 26
Finger Size Joystick .....27 - 41
Hand Size Joystick.....42 - 89
Naval Controller and Joystick .....90 - 112
Desktop Joystick .....113 - 116
Wireless Remote Controller.....117 - 118
Electric armrest box.....119
Accessories and Buttons.....120 - 148
PTZ Controller Joystick Keyboard .....149 - 156

MATE TECHNOLOGY SHENZHEN LIMITED
www.matend.com
info@matend.com
0086-755-8939-8907

MKF-TS02 Single axis joystick



A variety of handle colors and printing available, 1 axis, Hall sensor, full temperature range linear compensation, multi-point linearity correction, non-contact of moving parts and sensors, long life.

- Positioning method: spring automatically returns to the neutral position
- Operation angle: ±36 degrees (72 degrees)
- Power supply: DC3.3V or DC5V
- Power consumption: ultra-low power consumption, minimum working current 8mA, minimum working voltage 3.01V
- Signal output: analog voltage, a variety of specifications are optional
- Life span: more than 5 million times
- Temperature range: -40℃～+85℃
- Protection level: IP67 protection

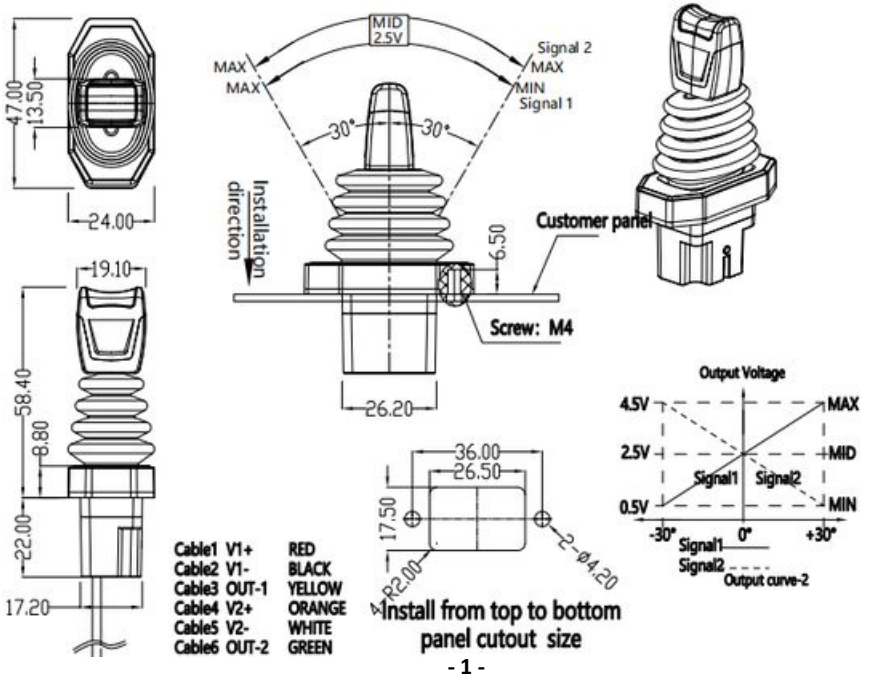

MKF-TS03 Single axis joystick (thumb stick)



MKF-TS03 series single-axis joystick. Adopt German imported Hall sensor, full temperature range linear compensation, multi-point linearity correction, moving parts and sensor non-contact, long life.

- 1 axis, Hall sensor
- Positioning method: center automatic return, center automatic return + one-way edge lock, one-way automatic return,
- 2 gears + 2 terminal reset, 3 gears + 2 terminal reset, 11 gears
- Operation angle: ±30 degrees (60 degrees)
- Power supply: DC5V (12MA)
- Signal output: analog voltage 0.5～4.5V； Redundant output optional
- Operating temperature: -40℃～+70℃ IP54 protection

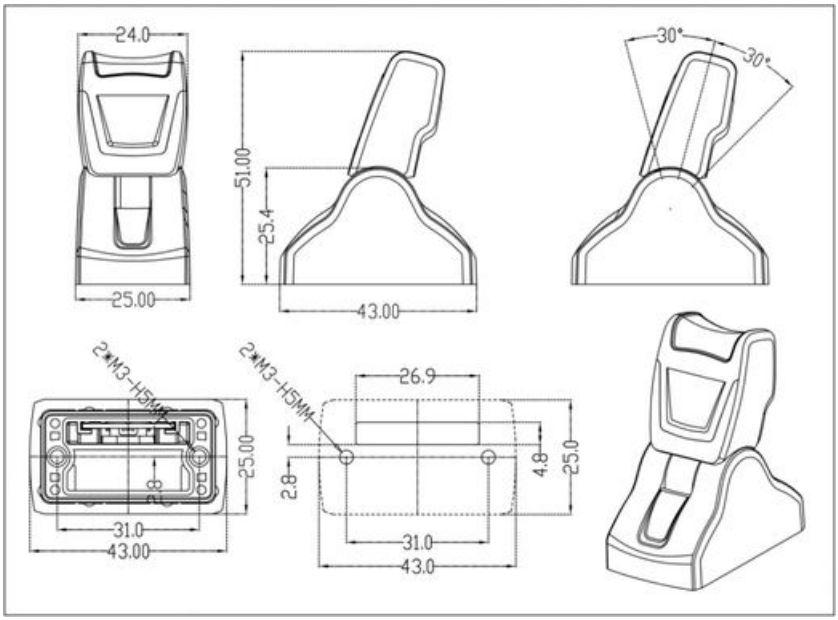

MKF-TS03-V2 Single-axis thumb joystick



- The MKF-TS03-V2 single-axis joystick series uses a patented waterproof design with dual Hall sensors.
- Detent: two-way spring return / single-side spring return / return with end lock / friction
- Operating angle: +/-30 degrees (60 degrees)
- Supply: DC5V (12mA)
- Signal output: analogue 0.5-4.5V
- Operating temperature: -40 to +70 degrees C
- Protection: IP65

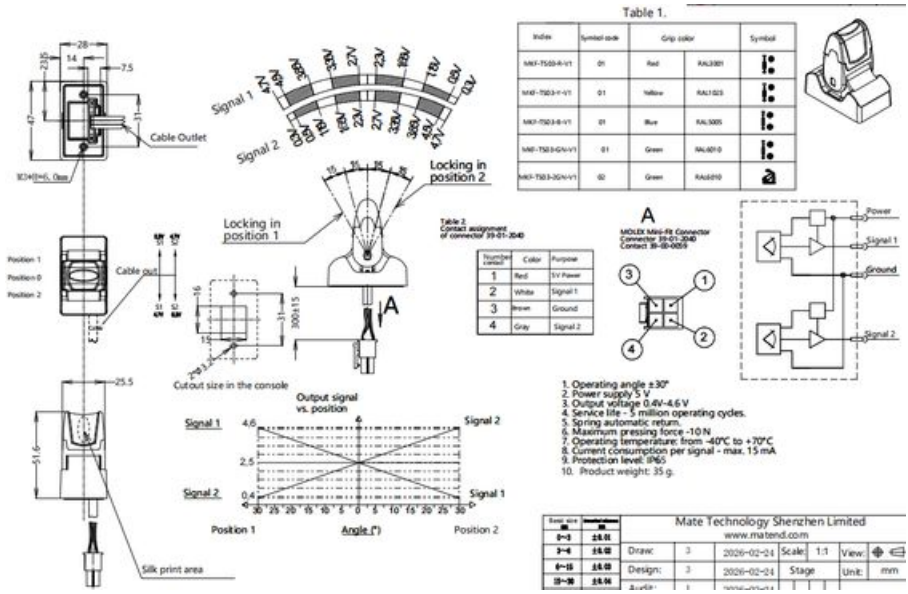

MKF-TS18 Single axis joystick (thumb stick)



MKF-TS18 series single-axis joystick. Adopt German imported Hall sensor, full temperature range linear compensation, multi-point linearity correction, moving parts and sensor non-contact, long life.

- 1 axis, Hall sensor
- Positioning method: center automatic return, center automatic return + two-way edge lock.
- Operation angle: ±40 degrees (80 degrees)
- Power supply: DC5V (12MA)
- Signal output: analog voltage 0.5～4.5V;
- Operating temperature: -40℃～+70℃ IP65 protection

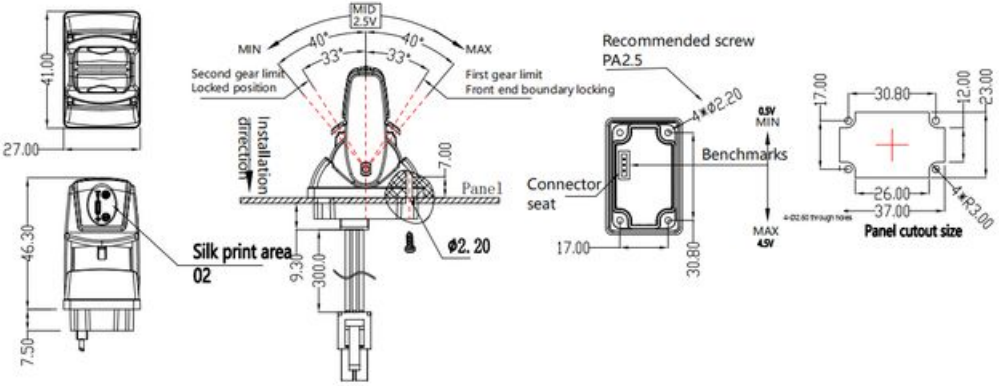

MKF-TS04 Single axis thumb joystick



- 1 axis, Hall sensor; Life span: more than 5 million times;
- Positioning method: center automatic return, center automatic return + one-way edge lock
- 2 gears + 2 terminal reset, 3 gears + 2 terminal reset, 11 gears (optional)
- Operation angle: ±35 degrees Signal output: 0.5-4.5V
- Power supply: DC5V/12MA Operating temperature: -40℃～+70℃

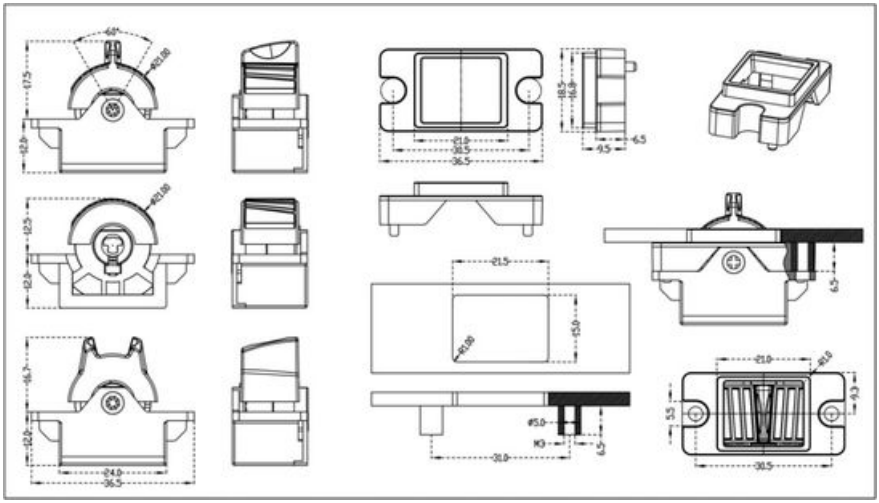

MKF-TS04-V2 Single axis thumb joystick



- 1 axis, Hall sensor
- Positioning method: the spring automatically returns to the neutral position and friction brake
- Operation angle: ±30 degrees
- Signal output: 0.5-4.5V;
- Power supply: DC5V/12MA
- Life span: more than 5 million times;
- Operating temperature: -40℃～+70℃

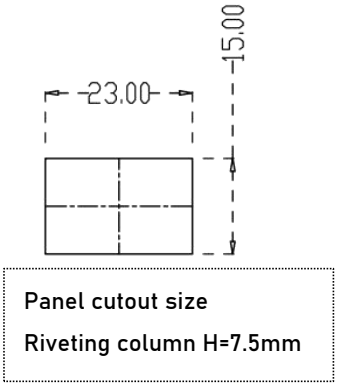

Panel cutout size

Riveting column H=7.5mm

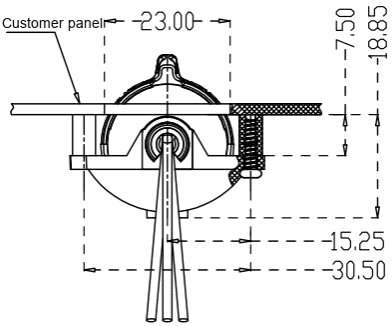

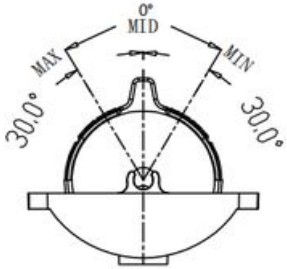

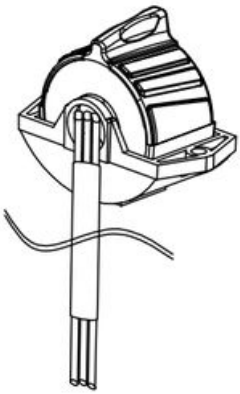

MKF-TS01 Single axis thumb joystick



- 1 axis, Hall sensor
- Indicating light: three-color LED light (white/red/green)
- Positioning method: the spring automatically returns to the neutral position
- Operation angle: ±30 degrees
- Signal output: 0.5-4.5V;Redundant output optional
- Power supply: DC5V/12MA
- Life span: more than 5 million times;
- Operating temperature: -40℃～+70℃

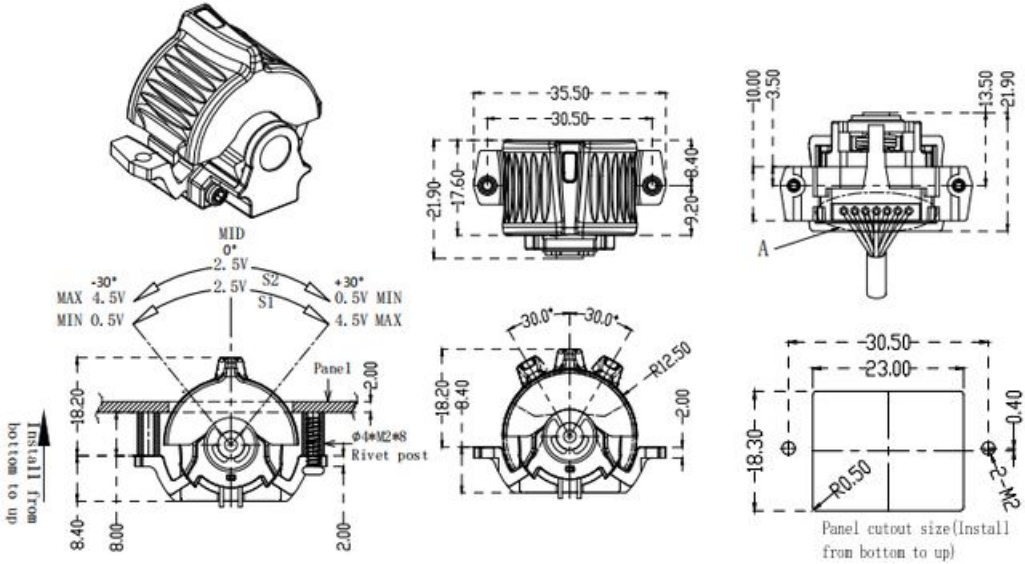

MKF-TS08 Single axis thumb joystick



Handle A



Handle B

- 1 axis, Hall sensor
- Positioning method: the spring automatically returns to the neutral position
- Operation angle: ±25 degrees
- Signal output: 0.5-4.5V@DC5V
- Power supply: DC5V/12MA
- Life span: more than 5 million times
- Operating temperature: -40℃～+70℃

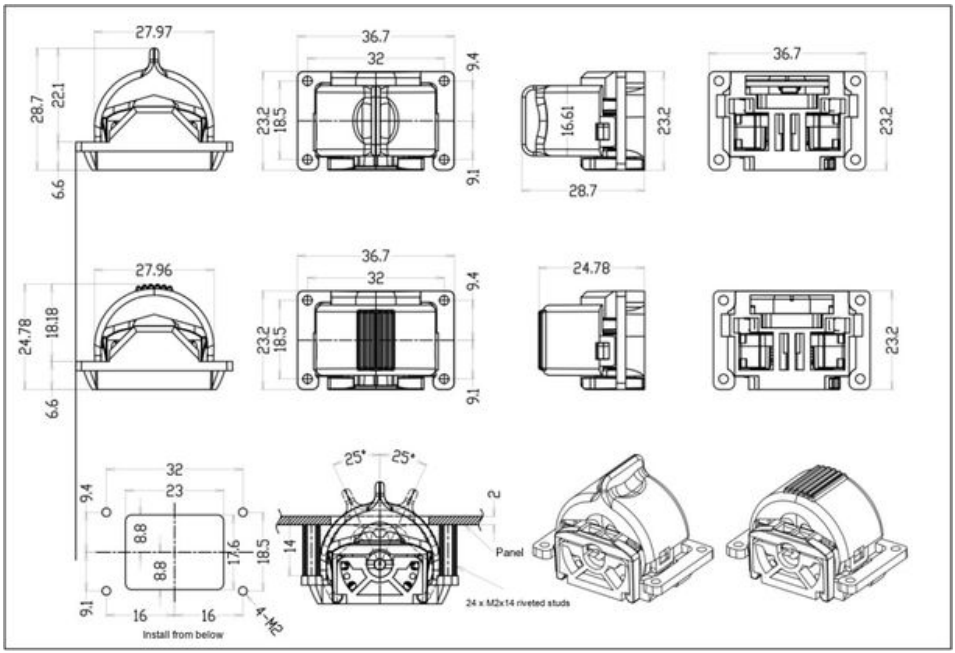

MKF-TS06 Single axis thumb joystick



Handle A



Handle B

- 1 axis, Hall sensor
- Positioning method: the spring automatically returns to the neutral position
- Operation angle: ±30 degrees
- Signal output: 0.5-4.5V
- Power supply: DC5V/12MA
- Life span: more than 5 million times
- Operating temperature: -40℃～+70℃

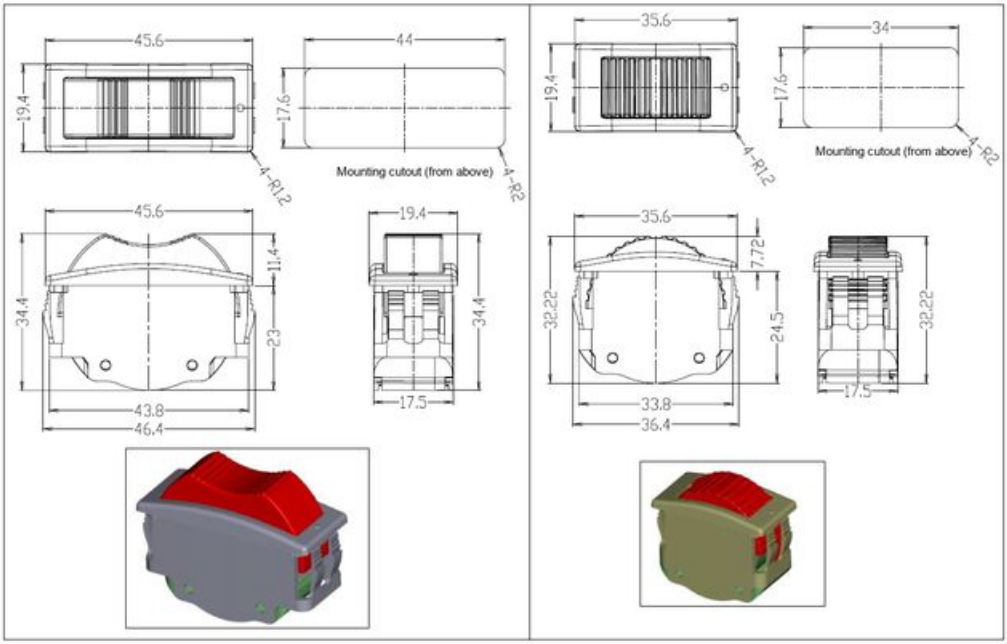

MKF-TS06-C Single axis thumb joystick



- 1 axis,dual Hall sensor
- Positioning method: the spring automatically returns to the neutral position
- Operation angle: ±31.5 degrees
- Signal output: 0.5-4.5V
- Power supply: DC5V/12MA
- Life span: more than 5 million times
- Operating temperature: -40℃～+70℃

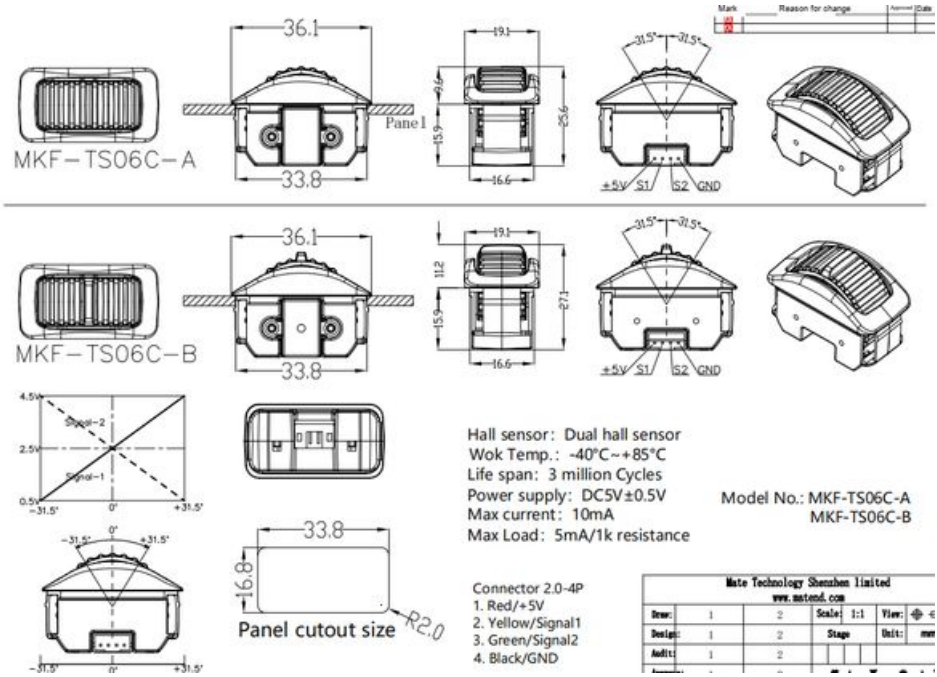

MKF-TS07 Waterproof single-axis joystick (finger wheel)





- 1 axis, Hall sensor operating angle: ±24°
- Power supply: DC5V/12MA Signal output: 0.5-4.5V
- Life span: more than 5 million times Operating temperature: -40℃～+70℃
- Positioning method: the spring automatically returns to the neutral position or the 3rd gear keeps positioning

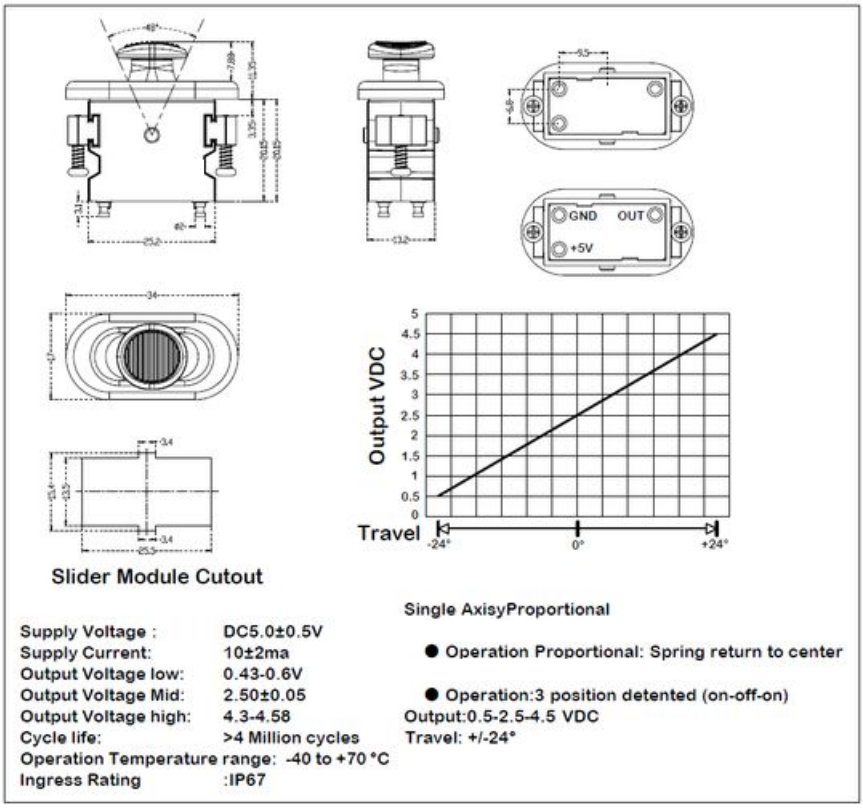

MKF-TS05 Waterproof three-position switch







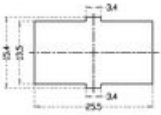

Slider Module Cutout

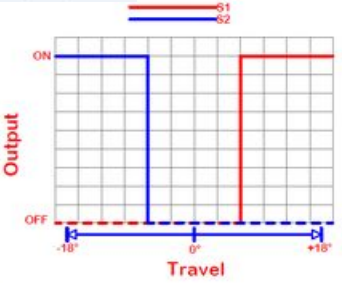



Voltage :	30Vdc
Supply Current:	2A
Cycle life:	>1 Million cycles
Operation Temperature range:	-40 to +85°C
Ingress Rating	:IP67

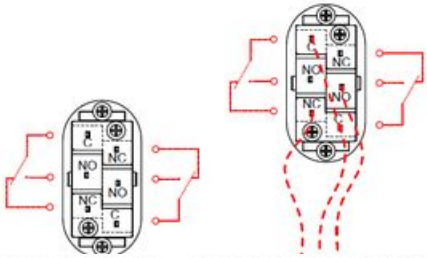

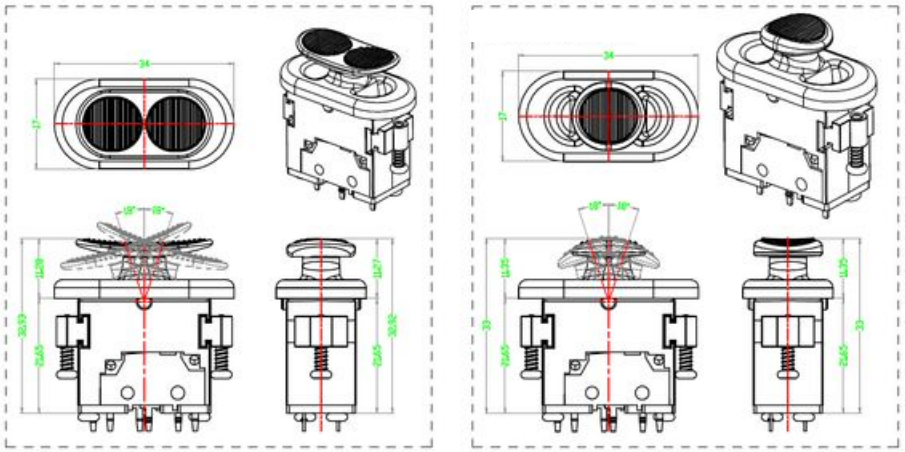

MKF-TS1065 Hall effect 3-position FNR switch



- Basic data: Hall sensor; operating angle +/-24 degrees
- Supply: DC5V / 12mA; output: open collector
- Life: more than 1,000,000 cycles; operating temperature -40 to +70 degrees C
- Detent: 3-position maintained

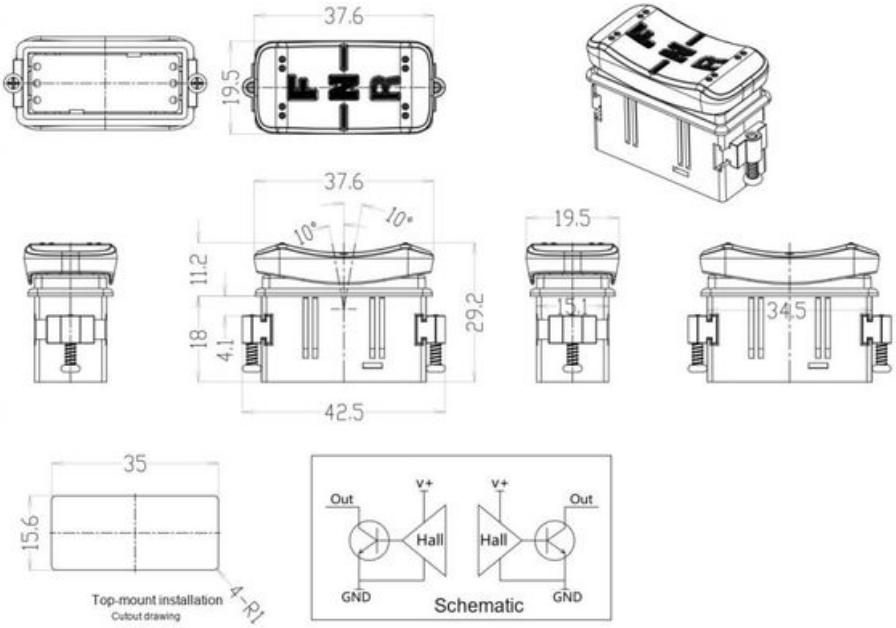

MKF-TS19 Camera zoom wheel





MKF-TS19 is designed specifically for zoom control of cameras, used for professional level camera head control. Adopting Hall sensors with high accuracy and long lifespan, adopting advanced structural design and imported damping materials, it has a good control feel.

- Operating angle: ± 18 °
- Power supply: DC5V
- Power consumption: 12MA
- Signal output: Analog voltage 0.5-2.5V-4.5V
- Life: more than 5 million times;
- Operating temperature: -40℃～+70℃
- Protection: IP54

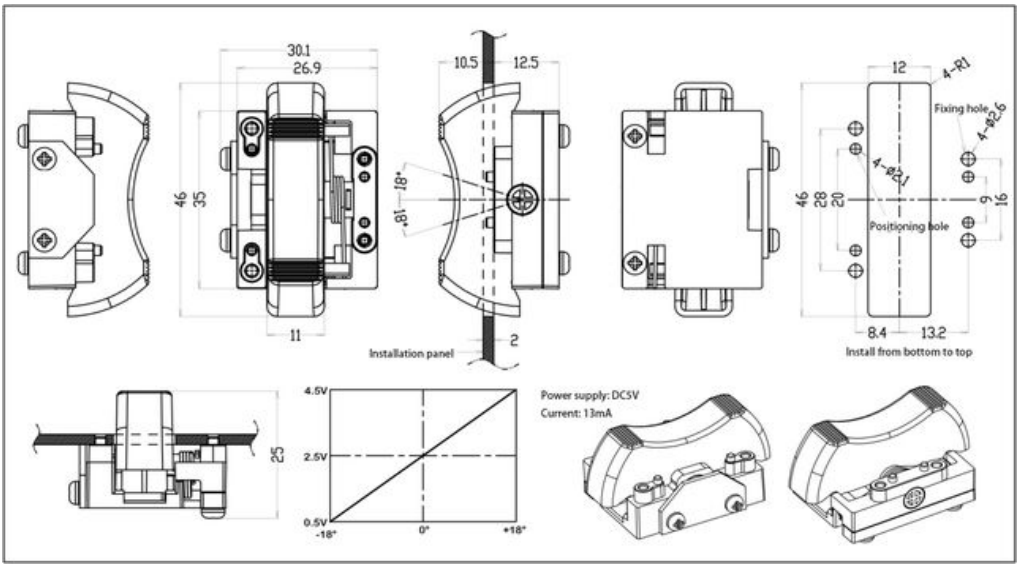

MKF-TS21 Thumb wheel



- Hall Sensor Operating Angle: ±18°
- Power Supply: DC5V/12mA
- Signal Output: Redundant 0.5-2.5-4.5V
- Lifespan: Over 2 million cycles; Operating Temperature: -40°C to +75°C
- Positioning: Spring-loaded return to center
- Enclosure: IP67 above panel

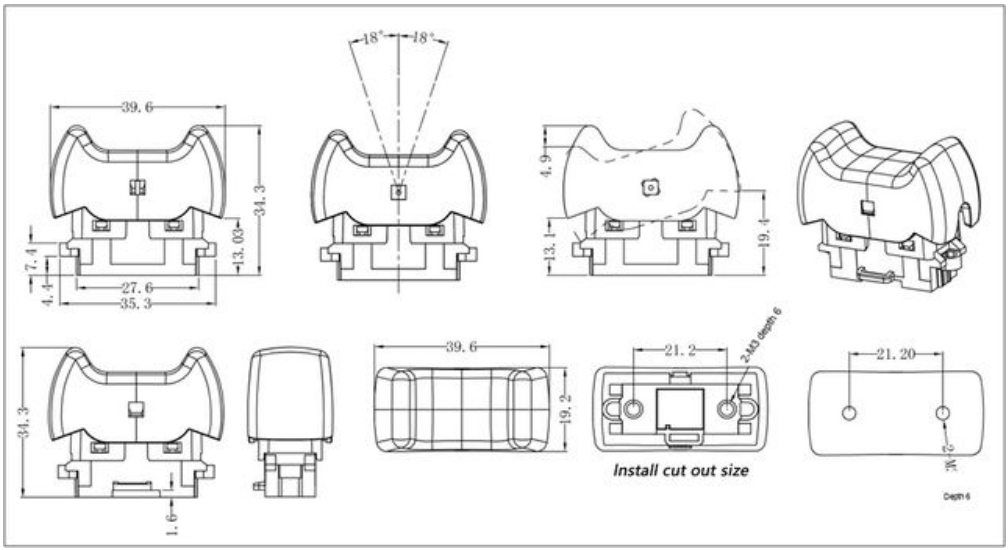

MKF-TS21-B Thumb wheel



- Hall Sensor Operating Angle: ±18°
- Power Supply: DC5V/12mA
- Signal Output: Redundant 0.5-2.5-4.5V
- Lifespan: Over 2 million cycles; Operating Temperature: -40° C to +75° C
- Positioning: Spring-loaded return to center

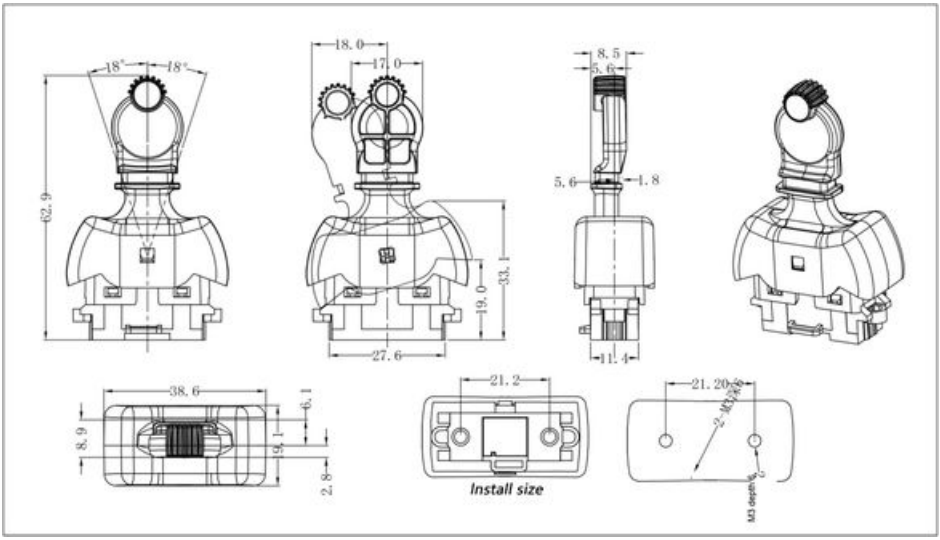

MKF-TS20 Waterproof thumb wheel



- Hall sensor
- Operating angle: ±24°
- Power supply: DC5V/12MA
- Signal output: redundant 0.5-2.5-4.5V
- Life span: more than 2 million times;
- Operating temperature: -40℃～+75℃
- Positioning method: Spring return to neutral position
- Protection: IP67 above panel

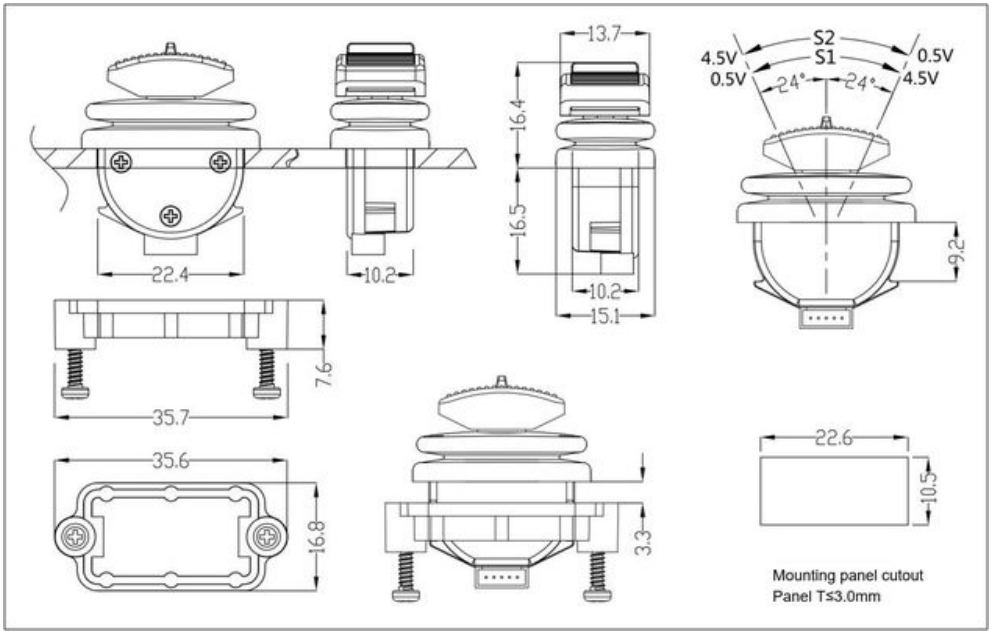

MKF-TS20-V2 Waterproof thumb wheel



- Sensor: dual Hall sensors; spring return to centre
- Operating angle: +/-30 degrees
- Signal output: 0.5-2.5-4.5V crossed dual voltage signals
- Supply: DC5V / 9mA
- Life: more than 1,000,000 cycles
- Operating temperature: -40 to +70 degrees C
- Protection: IP54 for the electronics

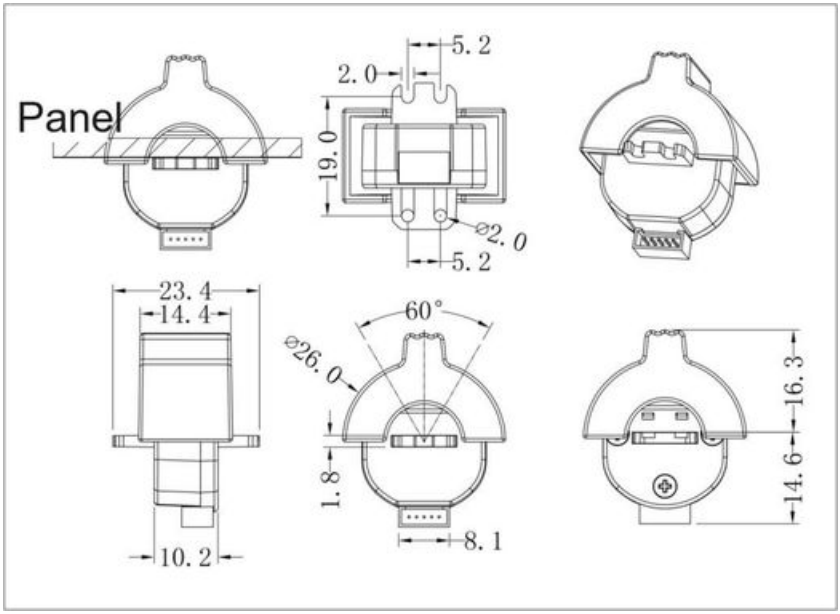

MKF-JS22A series-UAV joystick



- Used for drone remote control
- Spring automatically returns to center
- Mechanical angle: ±40 degrees
- Power supply: 2.8-5.5V
- Signal output: analog voltage signal

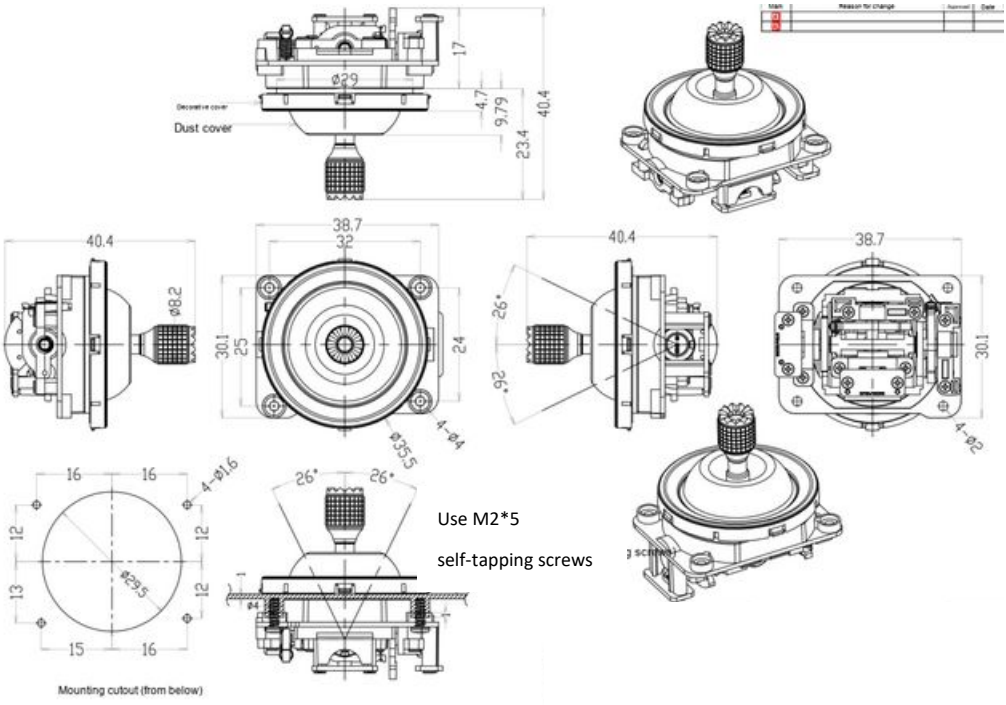

MKF-JS22B Drone Thumb wheel



- Used on the drone remote control, on the front side of the right hand, with the automatic centering dial
- Spring automatically returns to center
- Mechanical angle: ±36 degrees
- Power supply: 2.8-5.5V
- Signal output: analog voltage signal
- Operating life: 1 million times

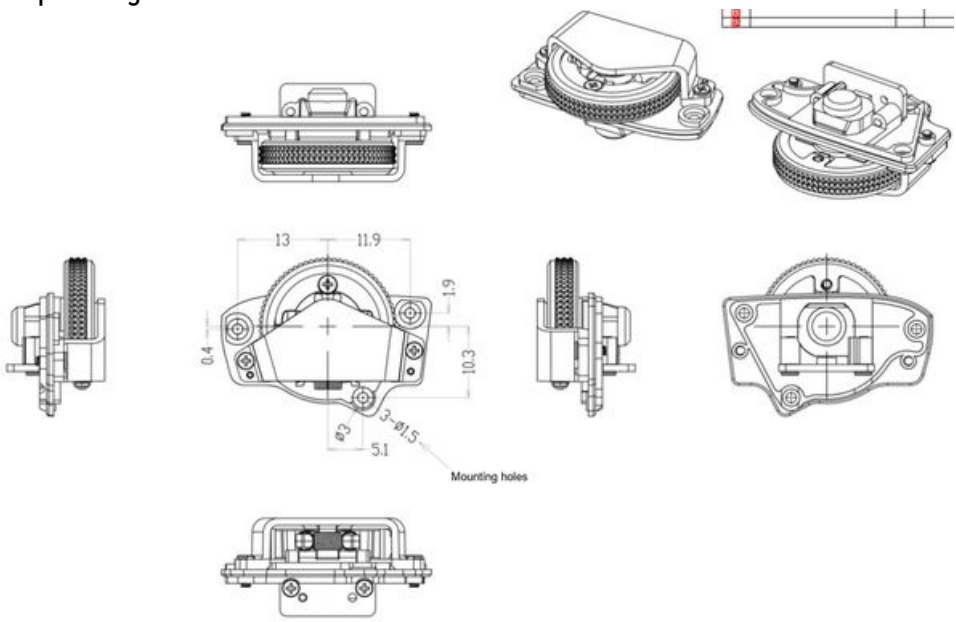

MKF-JS22C Drone wheel encoder



- Used on the drone remote control, front left hand, roller encoder, continuous rotation
- AB orthogonal coded signal
- Number of locations: 12
- Number of pulses: 12
- Operating life: 100000 Cycles

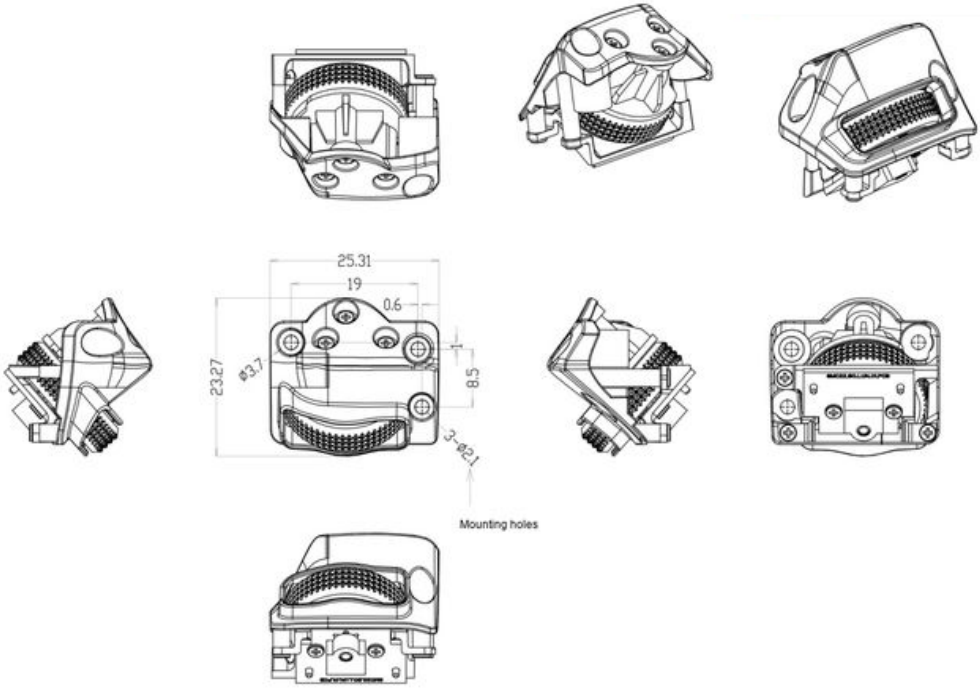

MKF-JS22D Roller encoder + button



- For use on control panels or joysticks. Made of anodized aluminum alloy.
- Scroll wheel encoder + button function, functions similar to a mouse wheel.
- Scroll wheel encoder, continuous rotation.
- A-B quadrature encoder signal.
- Number of positions: 12.
- Number of pulses: 12.
- Operating life: 100,000 cycles.
- Button life: 1,000,000 cycles.



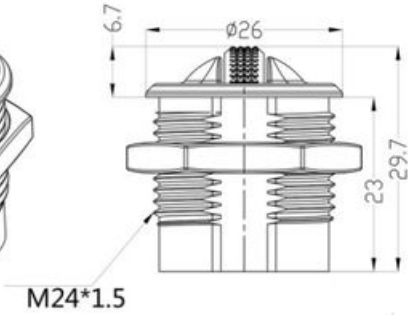

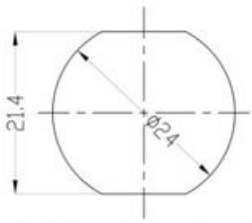

Mounting cutout dimensions (from above)

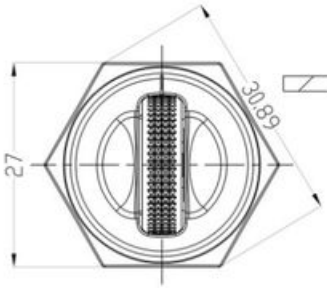

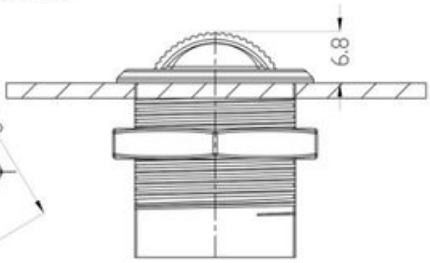

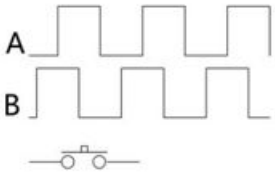

MKF-JS09 2-axis joystick



- 1-axis or 2-axis, Hall sensor, 4 types of handles
- Operation mode: Round limiter (360 degree range)Straight limiter (only front and back, no left and right)
- Returning method: spring automatic return
- Operation angle: XY axis ±25° diagonal ±31°
- Power supply: DC5V
- Signal output: 0-5V (or 0.5-4.5V), USB2.0
- Life span: 5 million times
- Material: synthetic engineering plastic handle
- Replacement accuracy: less than 2%
- Operating temperature: -40℃～+70℃
- Storage temperature: -50℃～+80℃
- Protection level: above panel IP67

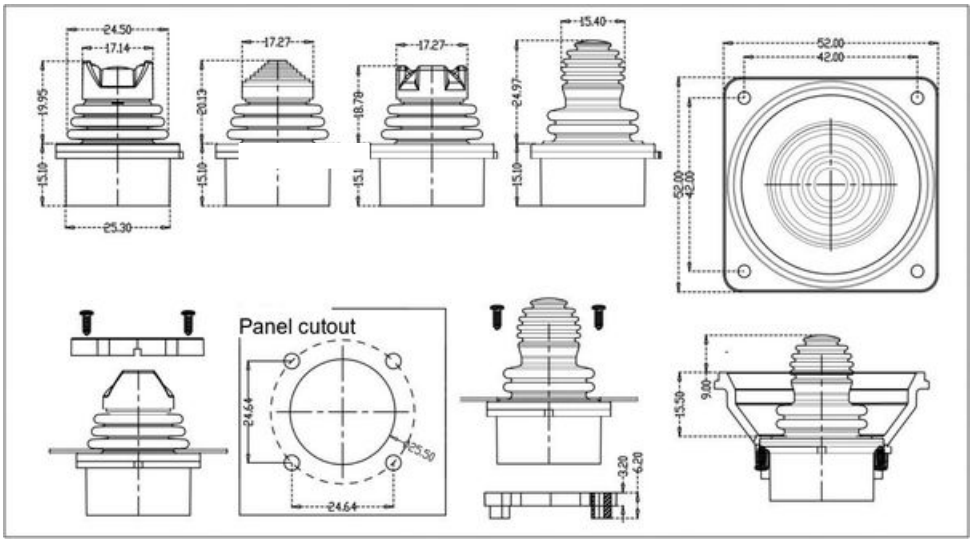

MKF-JS09-V2　2-axis joystick



- 1 or 2-axis, hall sensor
- Operating range: square / straight / cross
- Return method: spring automatic return
- Operating angle: XY axis ±25°
- Power supply: DC5V (4.5-5.5V)
- Signal output: 0.5-2.5-4.5V
- Lifespan: 5 million times
- Material: synthetic engineering plastic handle
- Repeated return accuracy: less than 5%.
- Operating temperature: -40℃～+70℃
- Storage temperature: -50℃～+80℃
- Protection level: above panel IP67

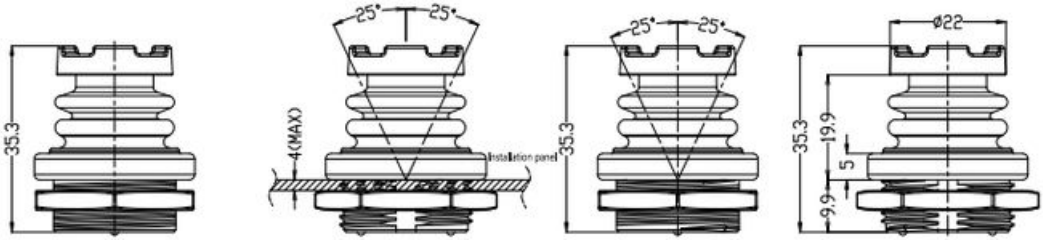



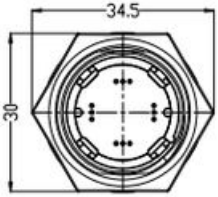

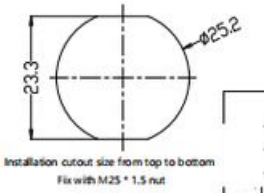

Model No.:MKF-JS09-V2-

Mate Technology Shenzhen Limited				
1	2	Scale	1:1	View:
1	2			Unit:
1	2			

MKF-JS09-V2-F Thumb joystick



- 1 or 2 axes with Hall sensors
- Operating gate: square / in-line / cross
- Return: spring return to centre
- Operating angle: X and Y axes +/-25 degrees
- Supply: DC5V (4.5-5.5V)
- Signal output: 0.5V - 2.5V - 4.5V
- Life: 1,000,000 cycles
- Return accuracy: better than 5%
- Operating temperature: -40 to +70 degrees C
- Protection: IP67 above the panel
- Mounting identical to MKF-JS09

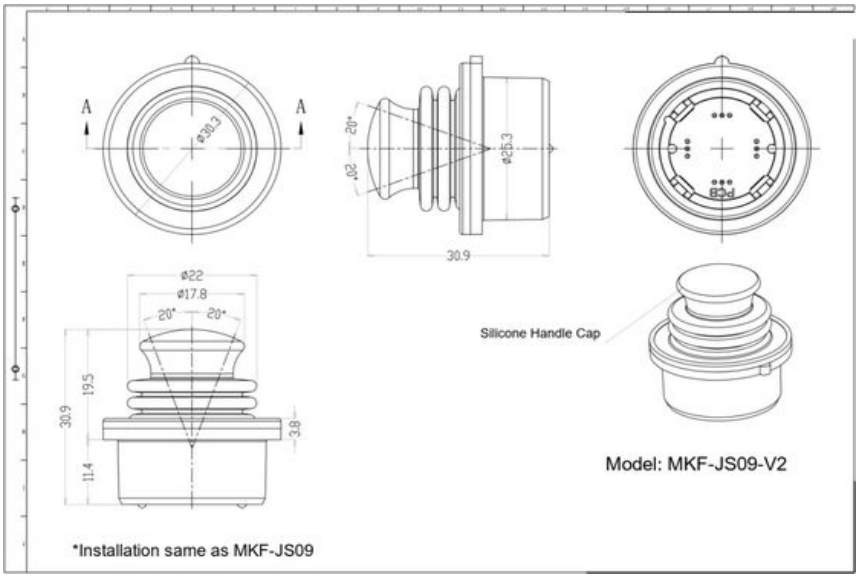

MKF-JS09-XS 2-axis Hall effect joystick



- 2-axis Hall effect sensor
- Operating range: Cross, Straight
- Return method: Spring-loaded
- Operating angle: ±20°
- Power supply: DC5V
- Signal output: 0.5-4.5V
- Lifespan: 5 million cycles
- Operating temperature: -40° C to +70° C

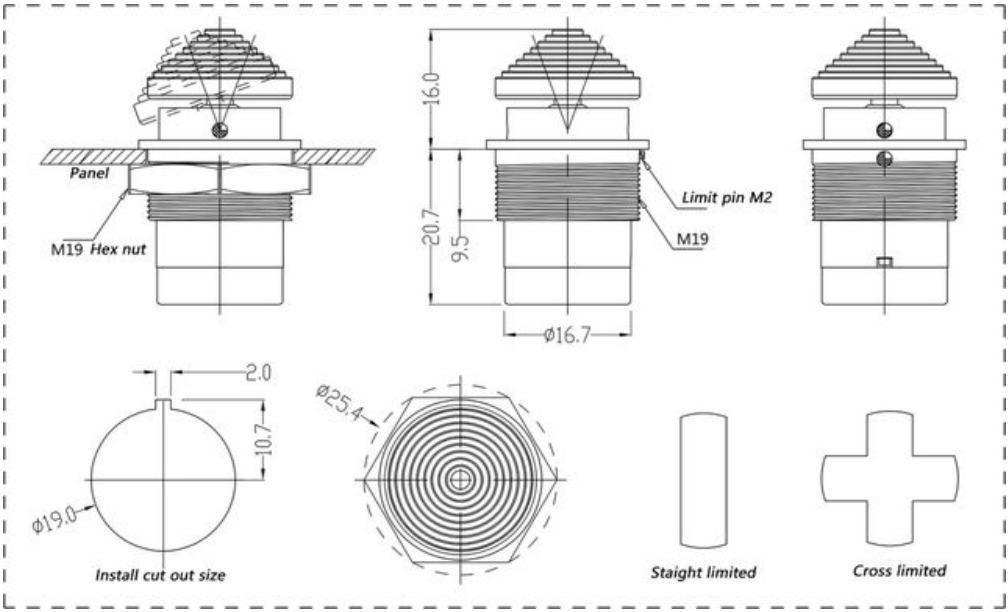

MKF-JS-KB6 2-axis with rotary and push down function



- 2-axis with rotary and push down function, Hall sensor
- XY positioning method: The spring automatically returns to the neutral position
- with indication LED and controllable LED
- Power supply: DC5V, minimum 4.1V, maximum 5.5V
- Signal output: analog voltage 0.5-2.5-4.5V@DC5V power supply
- Lifespan: more than 5 million times
- Return accuracy: less than 0.8%.
- Operating temperature: -40℃～+85℃
- Protection level: IP65 above the panel

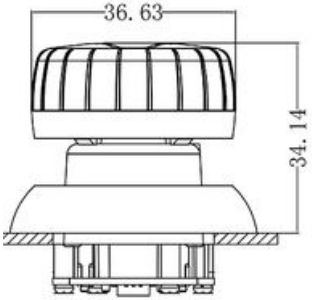

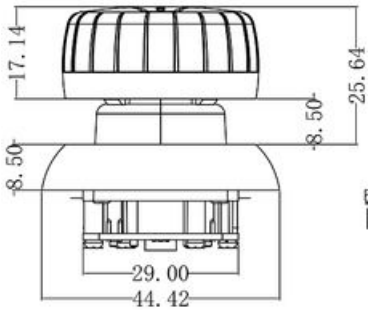

MKF-JS24 Remote control Joystick



The rubber handle has an orthogonal guiding function and has a good control feel. It is specially designed for the field of industrial remote controllers. There are many configurations, which can replace other brand products.

- 2-axis, Hall sensor
- Positioning method: The spring automatically returns to the neutral position
- Operating range: square limiter, with orthogonal cross guide
- Gear position feel: With gear shock feeling in the middle position, 4 gears each (optional)
- Operating angle: ±25°
- Power supply: DC5V, minimum 4.1V, maximum 5.5V
- Signal output: analog voltage 0.5-2.5-4.5V@DC5V power supply
- Lifespan: more than 5 million times
- Return accuracy: less than 0.8%.
- Operating temperature: -40℃～+85℃
- Protection level: IP65 above the panel

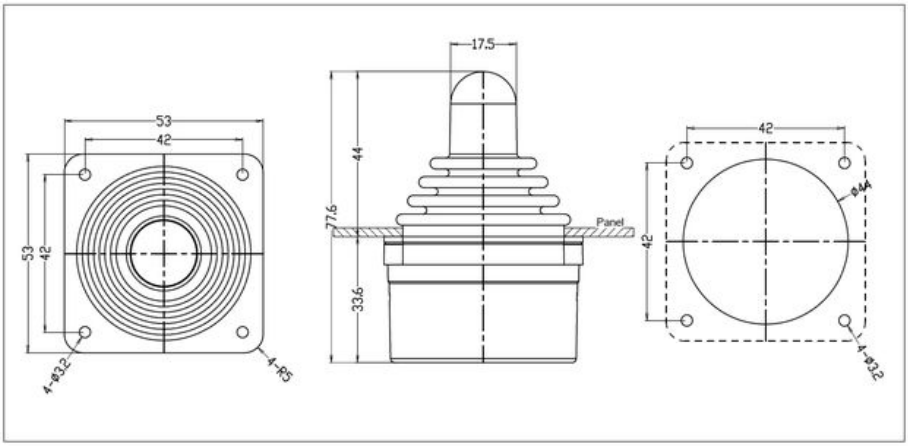

H38 SERIES 3-axis Hall joystick

1 button	No button



- Three-axis, Hall sensor
- Button: 1 button (reset)
- Operation angle: XY axis ±20°, Z axis ±30°
- Power supply: DC5V, 12-24V (optional)
- Signal output: analog voltage 0-5V, RS232, RS4
- Life span: 5 million times; button 1 million time
- Material: aviation aluminum alloy and ABS+PC material
- Replacement accuracy: less than 0.8%
- Operating temperature: -40℃～+70℃
- Protection level: IP65 above the panel



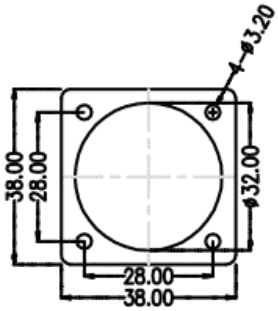

Panel cut out hole size

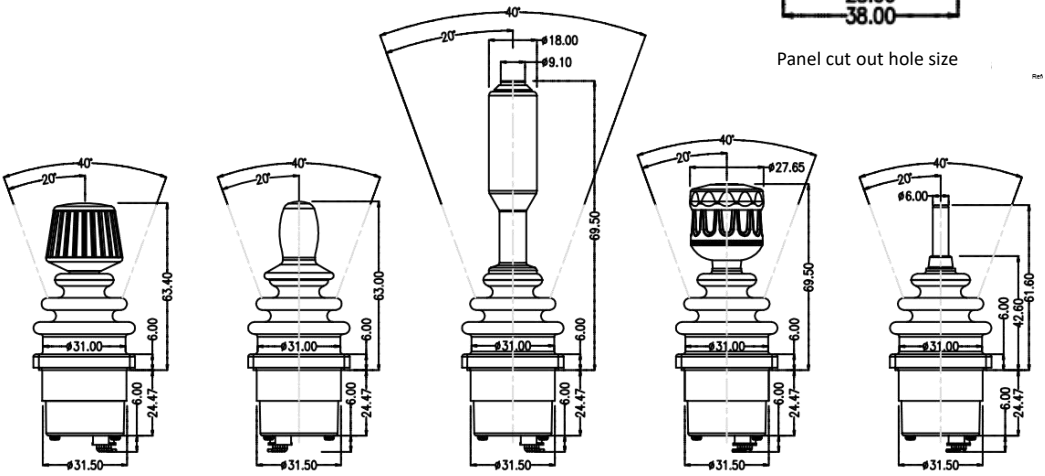

H81-JS27 series 2-axis Hall joystick

Rear Panel Mount Versions



- Applications: Robots, medical equipment, industrial equipment
- Material: aluminum alloy shell, stainless steel shaft
- Operating temperature: -40℃～+70℃
- 2-axis Hall sensor
- Operating angle: ±20°
- Power supply: DC5V
- Signal output: 0-5V (0.5-4.5)
- Communication interface (optional):USB, CAN, RS232, RS2422
- Life span: more than 5 million times;
- Repeated return accuracy: less than 0.1%.
- Protection level: IP65 above the panel

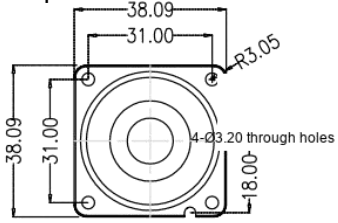

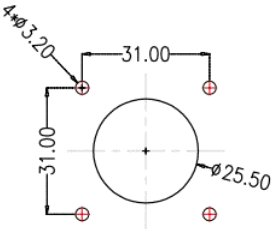

Panel cut out hole size

Install from bottom to top

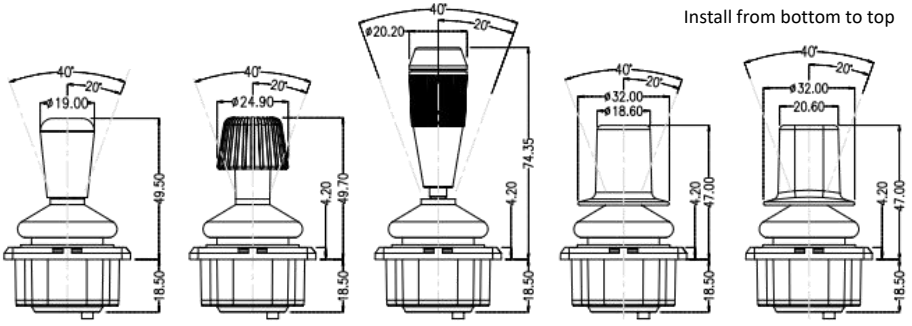

H81-JS28 series 2-axis Hall joystick

Top Panel Mount Versions



- Applications: Robots, medical equipment, industrial equipment
- Material: aluminum alloy shell, stainless steel shaft
- Operating temperature: -40℃～+70℃
- 2-axis Hall sensor
- Operating angle: ±20°
- Power supply: DC5V
- Signal output: 0-5V (0.5-4.5)
- Communication interface (optional):USB, CAN, RS232, RS2422
- Life span: more than 5 million times;
- Repeated return accuracy: less than 0.1%.
- Protection level: IP65 above the panel

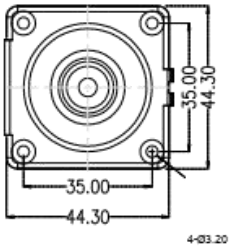

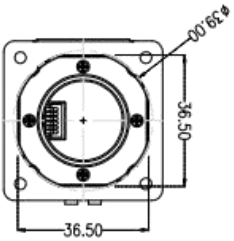

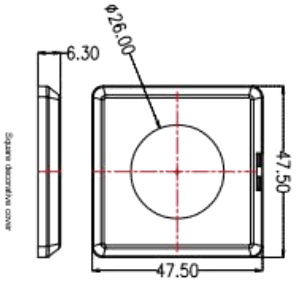

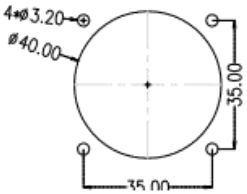

Mounting panel cutout

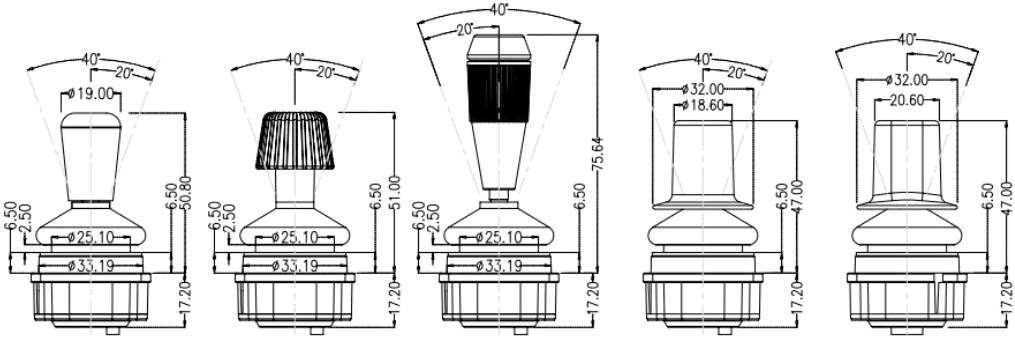

MKF-JS41 series special joystick for amusement equipment



- Application: vehicle driving, game simulation
- Material: Aluminum alloy shell, 8mm stainless steel shaft.
- 1 axis (Y) or 2 axis (XY), spring automatically returns to center
- Operating angle: XY axis ±20°
- Power supply: DC5V
- Signal output: 0-5V (0.5-4.5)
- Communication interface: RS485/CAN
- Lifespan: more than 5 million times;
- Repetition accuracy: less than 2%.
- Protection level: IP65 above the panel
- Operating temperature: -40℃～+70℃

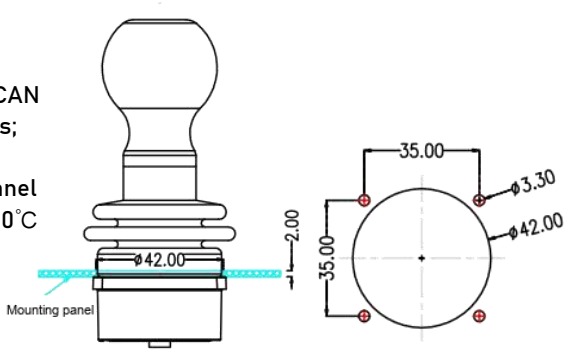

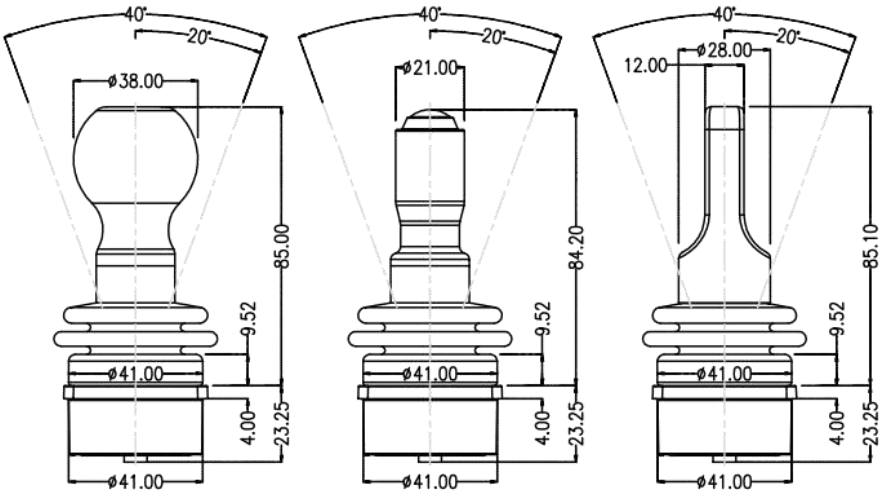

MKF-JS66 3-axis Hall joystick

Suitable for Robots, medical equipment, industrial equipment



- Used in industrial robots, medical equipment, optical instruments, remote controls, drone address stations and other fields.
- Hall sensor, 3-axis
- Operating range: round
- Buttons (optional): no button, 1 button, 2 buttons
- Power supply: DC5V
- Signal output: 0-5V (0.5-4.5)
- Lifespan: 5 million times
- Repeated return accuracy: less than 1%.
- Operating temperature: -40℃～+70℃
- Storage temperature: -50℃～+80℃
- Protection level: IP65 above the panel

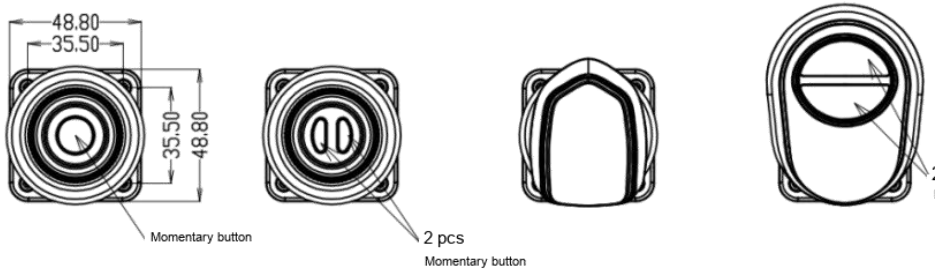

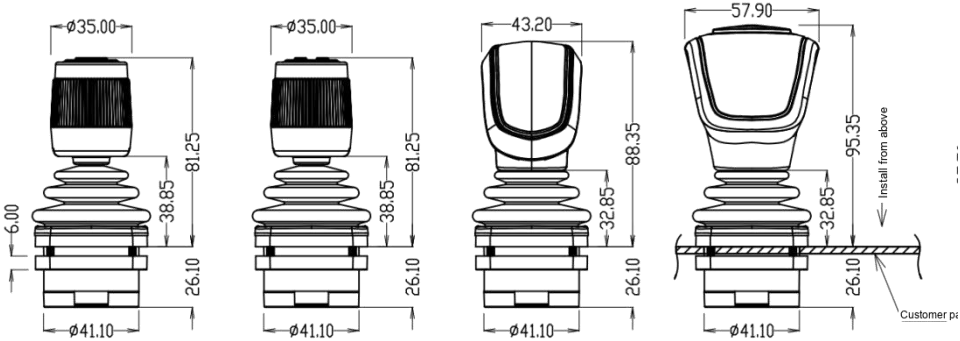

MKF-JS66E series 2-axis joystick



- Used for industrial robots, medical equipment, optical instruments; Remote control and other fields;
- Hall sensor, 2-axis; Operating range: circular, cross, single character;
- Power supply: DC5V or 10-24V;
- Signal output: voltage 0.5-4.5V/CAN, RS232, RS422, RS485;
- Lifespan: greater than 1 million cycles;
- Operating temperature: -40 ℃ to+70 ℃; Protection level: IP65 for the upper part of the panel;

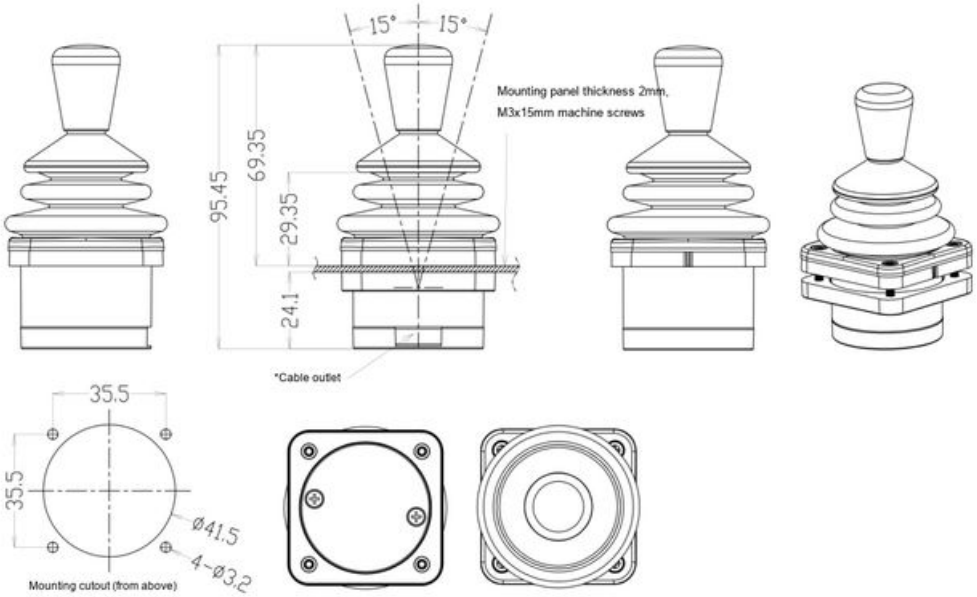

H44 SERIES 3-axis Hall Joystick



The H44 serie Multi axis contact-less joystick controller are designed for precision fingertip control applications where safety and long trouble-free life are primary requirements. It is available in one, two or three axis configurations and can accommodate a choice of handles, including push-button switch versions. Two mounting flange options allow attachment above or below the panel. The H44 serie has compact sizes, low operational force and high reliability are ideal for applications which include powered wheelchairs, robotics, UAV, CMM machines, medical and CCTV equipment, professional camera controls and remote controlled chest-packs.

- Sensor: Hall sensor
- Lever Action (Centering): Spring centering
- Mechanical Angle of Movement: X and Y axes: ±20°; Z axis: ±18°
- Lever gate profiles (options): Single axis, round, square, cross
- Signal output: analog voltage, RS485, RS422, RS232, USB, CAN
- Power supply: DC5V, DC12-28V,
- Power consumption: less than 9-25MA@5V PS
- Electrical life: 1,000,000 cycles
- Operating temperature: -40°C to +70°C
- IP Grade: IP67

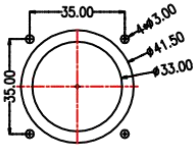

Panel cut out size

From bottom to top ∅ 33mm

From top to bottom ∅ 41.5mm

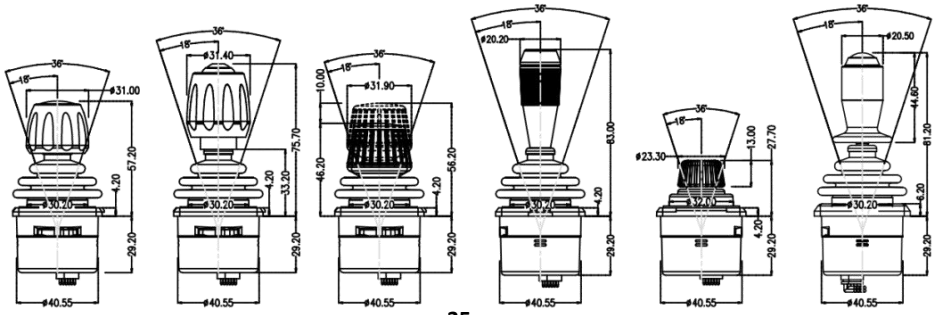

H44-JS35H 3-axis Hall effect joystick





- Axes: Hall sensors, 3 axes plus 1 button; the button has an illuminated ring
- Operating gate: square
- Operating angle: X and Y axes +/-20 degrees, Z axis +/-40 degrees
- Supply: DC5V
- Signal output: analogue 0.5-2.5-4.5V, RS232, RS485, USB, CAN

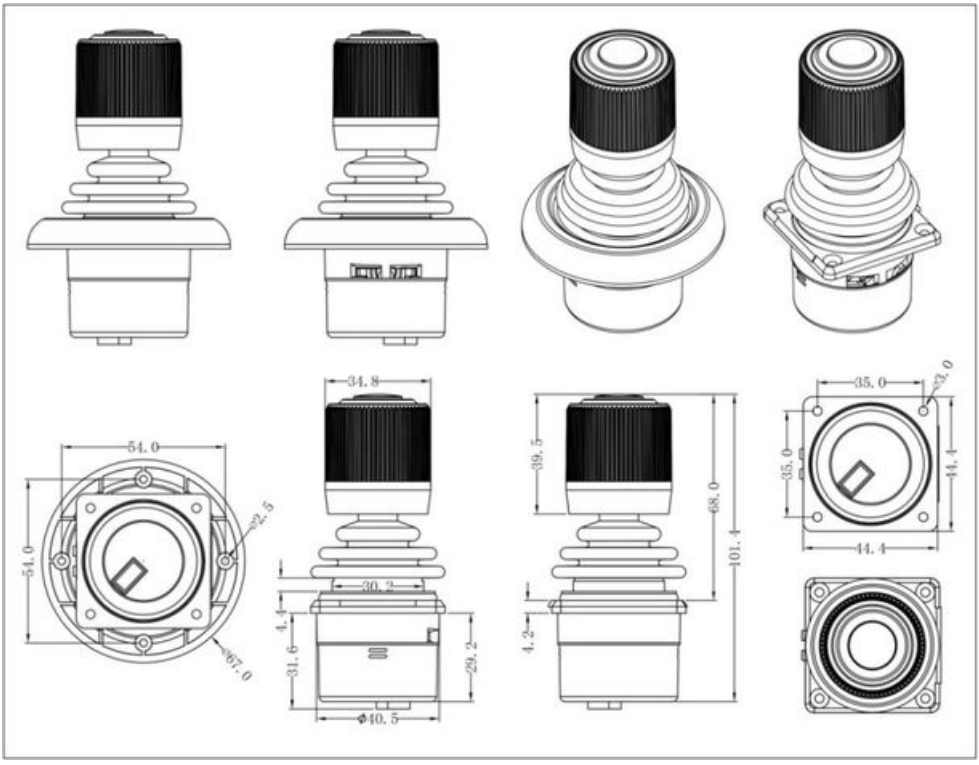

H55 SERIES 3-axis Hall joystick

Mate Joystick, Multi axis joysticks, Panel Mounted








Decorative circle (optional)

Used in television cameras, industrial robots, medical equipment, optical instruments

- Hall sensor, 1 axis, 2 axis, 3 axis (optional)
- Operating range: circle, one-word, cross, square
- Buttons: 1 button (reset)
- Operating angle: XY axis ±25°; Z axis ±36°
- Power supply: DC5V, 12-24V (select)
- Signal output: 0-5V (or 0.5-4.5) RS232, RS485, RS422, USB, CAN (2.0B)
- Lifespan: 5 million times; button 1 million times;
- Material: aluminum alloy, stainless steel and engineering plastics
- Repeated return accuracy: less than 0.1%
- Protection level: IP65 above the panel
- Operating temperature: -40℃～+70℃

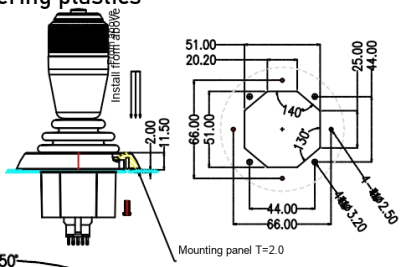

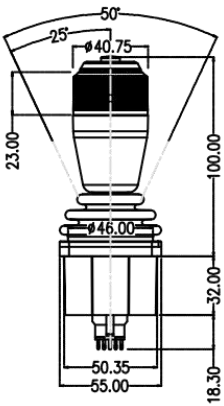

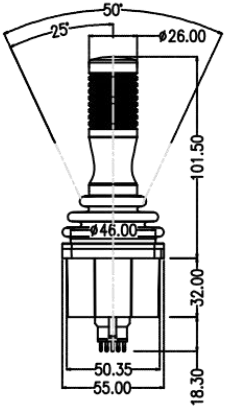

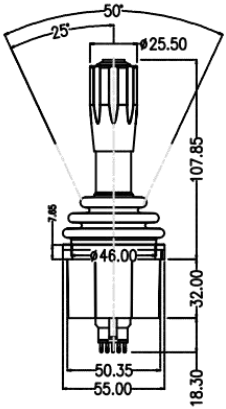

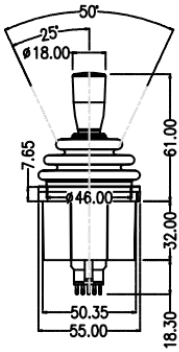

MKF-JS23 Single axis joystick series



Suitable for director switchers and industrial applications

- Single axis, Hall sensor
- Handle size: 45mm/60mm/70mm
- Positioning: friction resistance positioning (standard configuration)
- Spring automatic return (customized)
- Central gear: central mechanical gear (optional)
- Operation angle: XY axis ±38° (total 76°)
- Power supply: DC5V
- Signal output: analog voltage 0-5V, USB
- Current: 0-20MA,
- Life span: 5 million times;
- Operating temperature: -40℃～+70℃





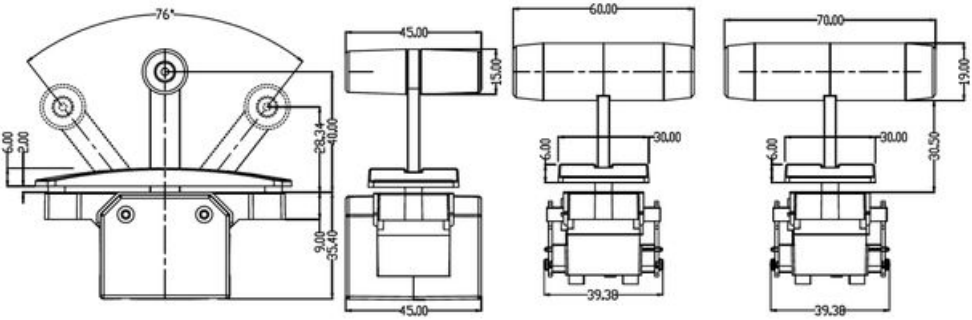

MKF-JS18 Single-axis joystick (T-BAR)



MKF-JS18 series single-axis joystick is the main accessory of video switcher products. It adopts German imported Hall sensor, full temperature range linear compensation, multi-point linearity correction, non-contact of moving parts and sensor, long life, advanced structure design and imported damping material, with good hand feeling, widely used in broadcasting TV products.

- 1 axis
- Sensor: Hall sensor
- Handle material: aluminum alloy, anodized surface
- Positioning method: friction resistance positioning
- Operation angle: 60 degrees
- Power supply: DC5V
- Power consumption: 12MA (Test conditions: 5V power supply, analog signal output)
- Signal output: analog voltage 0-5V
- Life: more than 5 million times;
- Operating temperature: -40℃～+70℃
- Protection: IP54

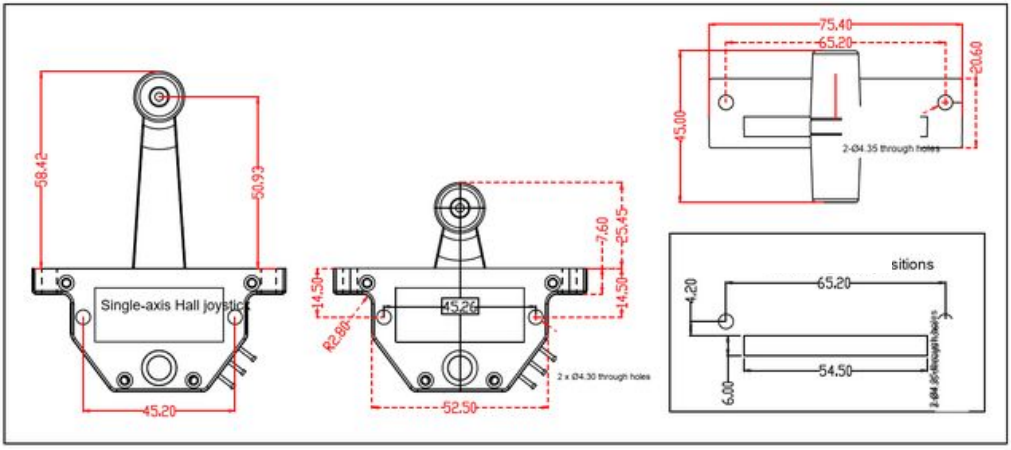

MKF-JS101B Electronic throttle for armrest box





- Friction brake, adjustable resistance
- Mechanical angle 76 degrees
- Hall sensor
- Signal output: 1 or 2 voltage signals
- Power supply: DC5V
- Power consumption: 20mA@DC5V
- Working temperature: -45℃～+75℃

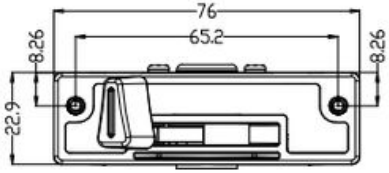

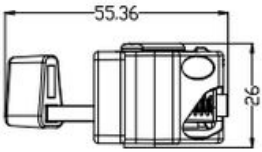

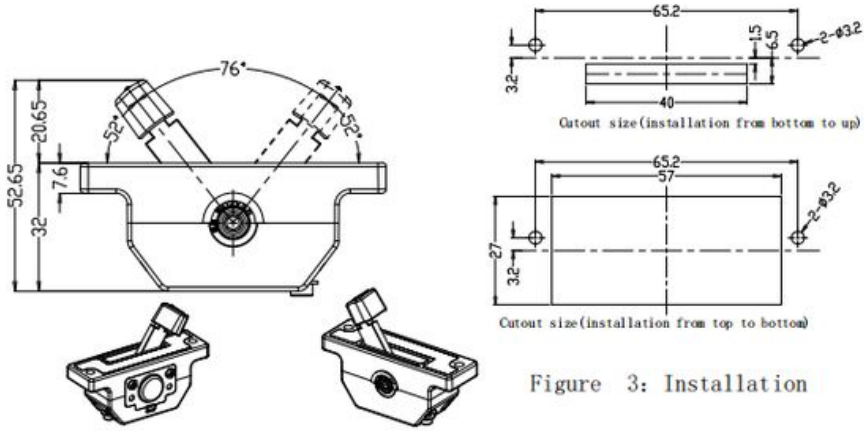

Figure 3: Installation

MKF-JS18-V2 Single-axis joystick (T-BAR)



MKF-JS18-V2 series single-axis joystick is the main accessory of video switcher products. Foldable design can save space. It adopts German imported Hall sensor, full temperature range linear compensation, multi-point linearity correction, non-contact of moving parts and sensor, long life, advanced structure design and imported damping material, with good hand feeling, widely used in broadcasting TV products.

- 1 axis
- Sensor: Hall sensor
- Handle material: aluminum alloy, anodized surface
- Positioning method: friction resistance positioning
- Operation angle: 60 degrees
- Power supply: DC5V
- Power consumption: 12MA (Test conditions: 5V power supply, analog signal output)
- Signal output: analog voltage 0-5V
- Life: more than 5 million times;
- Operating temperature: -40℃～+70℃
- Protection: IP54

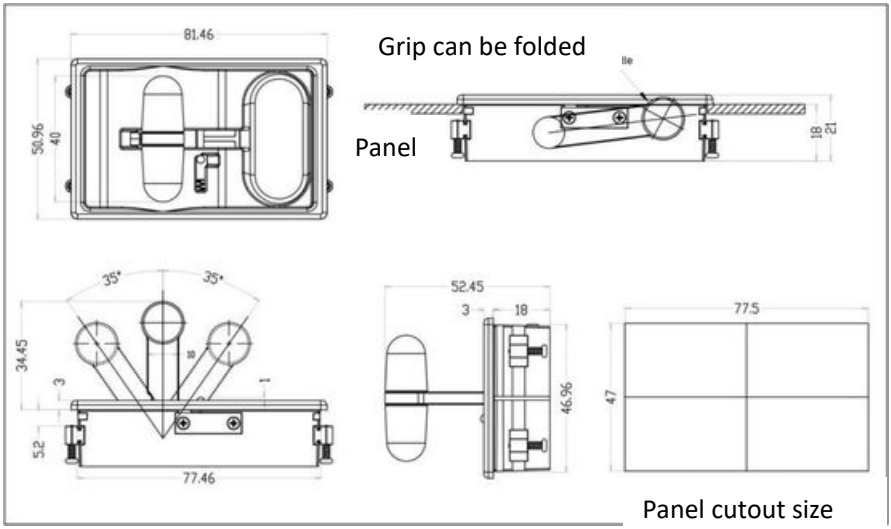

H80 SERIES multi-axis Hall joystick

Suitable for aviation/ Ship/ Construction machinery



- 2-4 axis Hall sensor
- Buttons: 2~6 buttons + trigger switch, imported button switch.
- Trigger switch, thumb wheel
- Button color: red/green/blue/yellow/black
- Direction switch: 4 direction switches
- Positioning method: spring automatic return
- Operating angle: ±22.5°
- Power supply: DC5V, 12-24V (select)
- Signal output: /Analog voltage 0-5V/0.5-4.5V/0.3-4.7V@neutral 2.5V
- /Analog voltage signal, linear V-shaped curve + direction switch
- /Analog voltage signal, V-shaped curve (low center) + direction switch
- /RS232/RS422/RS485/CANOPEN/CAN J1939/USB(HID2.0)
- /Modbus master or slave
- Life span: more than 5 million times;
- Repeat accuracy: less than 0.8%.
- Material: plastic, aluminum alloy, stainless steel
- Protection level: IP65 above the panel
- Working temperature: -40℃~+75℃

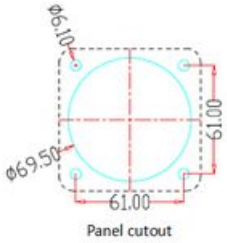

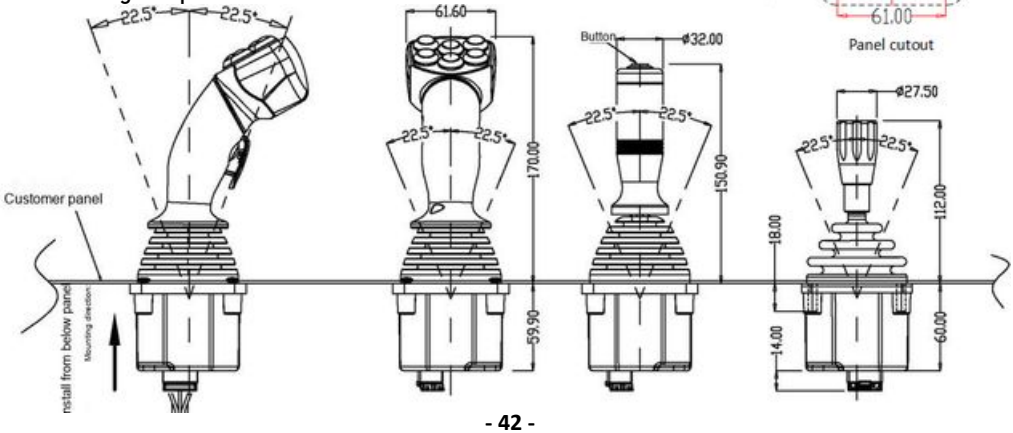

MKF-JS05/H80 SERIES series



Panel layout options

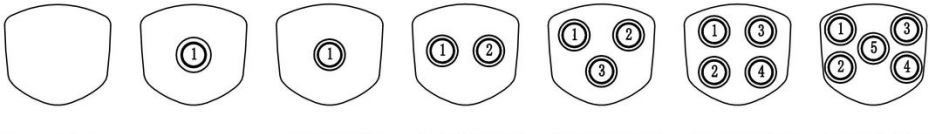

No push button | 1 push button | 2 push buttons | 3 push buttons | 4 push buttons | 5 push buttons



1 stainless steel button

6 push buttons | 1 thumb joystick | 2 PB + 1 TJ | 1 thumbwheel | 1 PB + 1 TW | 2 PB + 1 TW(right) | 2 PB + 1TW(left)

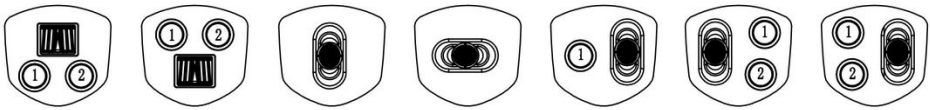

2 PB + 1 TW (up) | 2 PB + 1 TW (down) | 1 thumbwheel MKF-JS07 (vertical) | 1 thumbwheel (horizontal) | 1 PB + 1 TW07(right) | 2 PB + 1TW07(left) | 2PB+1TW07(right)



2PB+1TW07(up) | 2PB+1TW07(down) | 2 TW07(vertical) | 1 Rocker switch (vertical) | 1 Rocker switch (horizontal) | 1 PB + 1RS(right) | 2PB + 1RS(left)

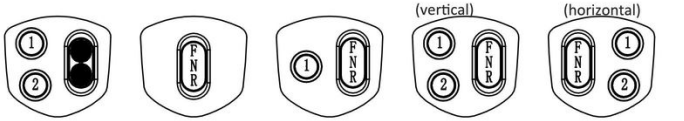

2 PB + 1 RS(right) | 1 RS (FNR) | 1 PB + 1 RS(FNR) | 2 PB + 1RS(FNR-right) | 2PB + 1RS(FNR-left)

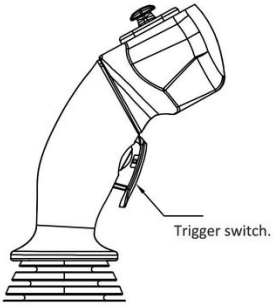

Trigger switch.

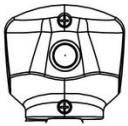

Push button on the back head.



thumbwheel TW07



rocker switch (black or red)



rocker switch (FNR)

MKF-JS35/H71 SERIES

Used in heavy machinery, hydraulic equipment, electric vehicle control



- Positioning method: spring automatic reset/friction brake
- Mechanical gear position: feel of mechanical gear position (positioning with limited resistance)
- Sensor: Hall sensor
- Direction switch: 2 * 2A/12V operating angle: ±34°, total angle 68°
- Power supply: DC5V/12-29V
- Signal output: voltage 0-5V, USB, CAN PWM (0-500mA) proportional valve signal
- Life: 5 million times; accuracy: less than 0.8%.
- Material: aluminum alloy, stainless steel
- Protection level: IP65 above the panel
- Proportional valve control has acceleration and deceleration speed, curve, maximum current, minimum current setting functions

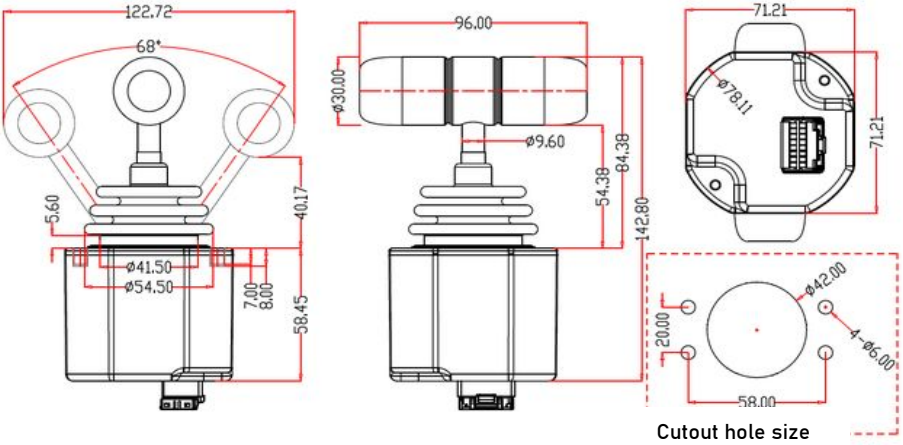

MKF-JS59



- 2-axis omnidirectional, spring automatic reset
- Operating angle: ± 20 °
- Power supply: DC5V, 12-24V (optional)
- Signal output: 0-5V, CAN, RS232/422
- Lifespan: greater than 5 million times;
- Materials: plastic, aluminum alloy, stainless steel
- Protection level: IP65 above the panel
- Operating temperature: -40 ℃~+75 ℃

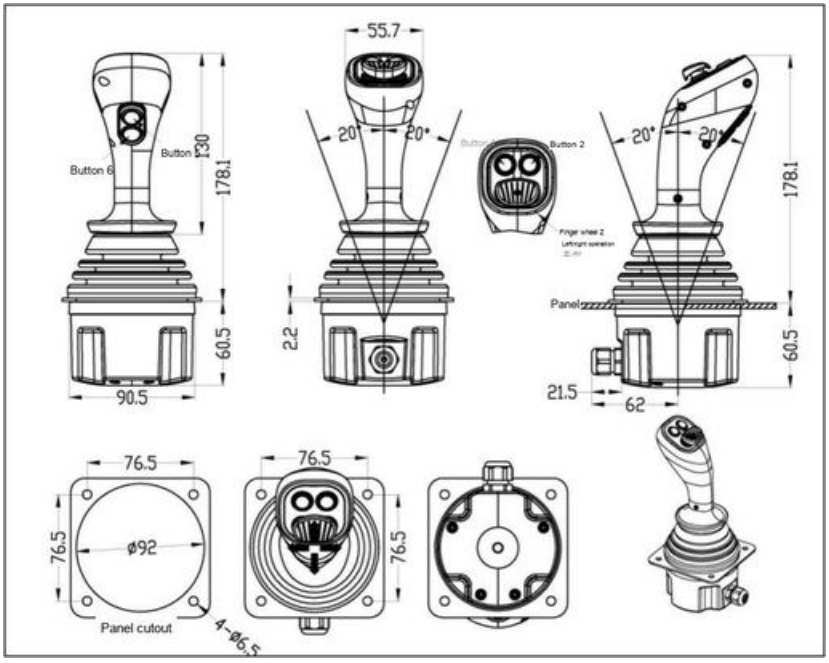

MKF-JS65



- Same operating feel as hydraulic control;
- Straight handle, 0-3 buttons+enable switch
- 1-2 axes, spring return, friction brake, gear position, and combination positioning;
- One way limit, cross limit, square limit, T-shaped, H-shaped, etc;
- Signal output: 0.5-4.5V, RS422, RS232, CAN, USB
- Protection level: IP67 above the panel
- Temperature: -40 ° C to+70 ° C;
- Power supply: DC5V or DC9-36V

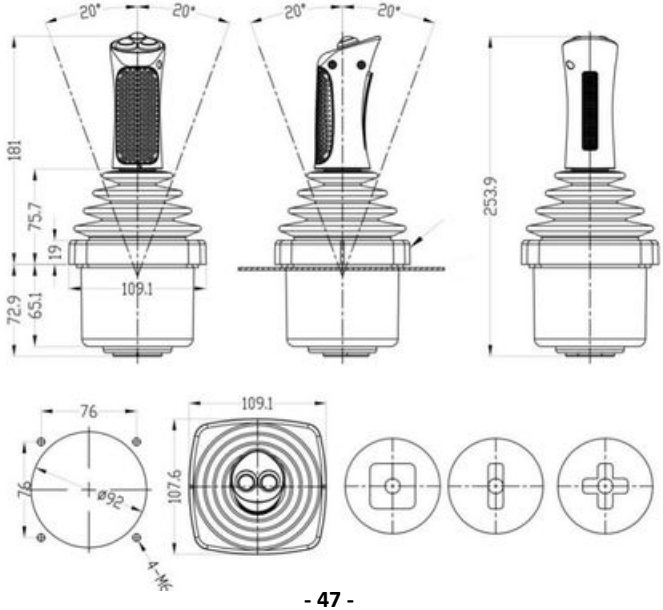

H56-JS65 Joystick



- Handle: 1 button
- Axes: 1 or 2
- Operating gate: square, in-line or cross (one only)
- Structure: 2-axis spring return
- Sensor: redundant Hall sensors
- Signal output: dual isolated CAN, isolated RS485
- Supply: DC10-36V

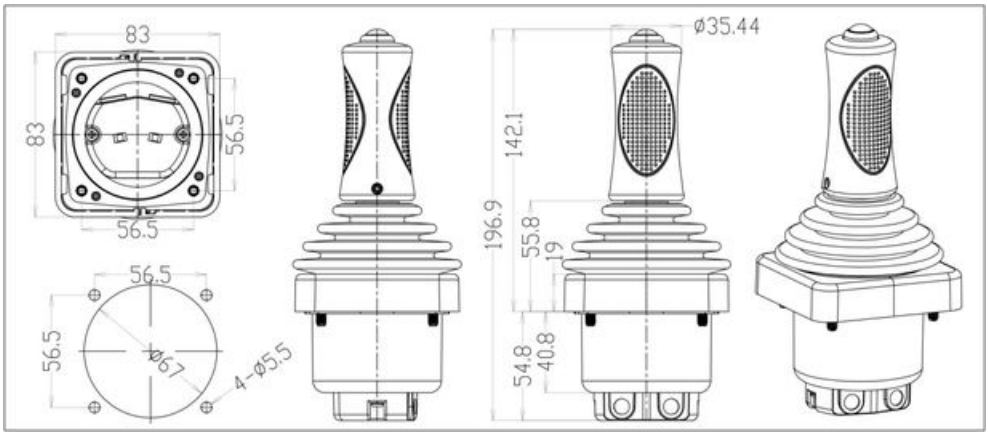

MKF-JS40 series drone joystick



- Handle material: aluminum-magnesium alloy
- Return mode: the spring automatically returns to the neutral position
- Configuration parameters: 6 waterproof button switches
- 1 * trigger switch with 2 strokes
- 1 * 2-way self-reset switch
- 1 * cross thumb Hall rocker
- Signal output: 0.5-4.5V/RS422/232/CAN/USB/ switch
- Life span: more than 5 million times
- Power supply DC5V or DC9-36V

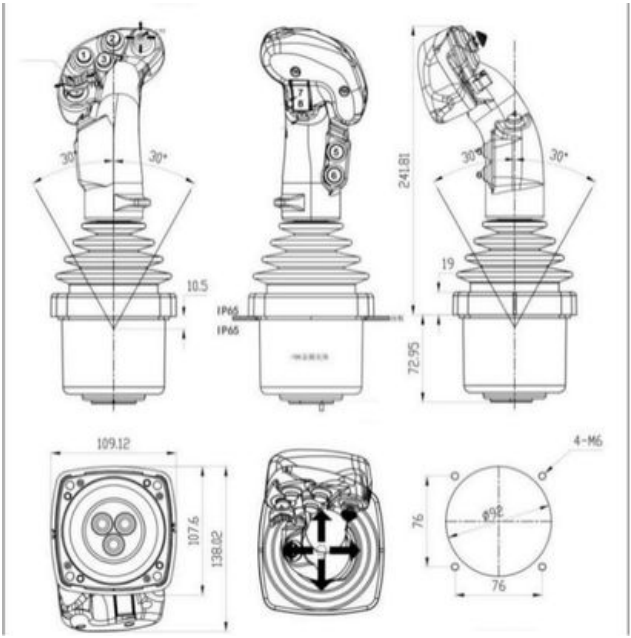

MKF-JS11 (Right handle)Agricultural Machinery Solution



- Multi-axis friction positioning or a combination of spring return and friction positioning
- Various operation ranges such as straight / cross / square / T-shape / H-shape, etc.
- Signal output: 0.5-4.5V, RS422, RS232, CAN, USB, switch, etc.
- IP65 protection; temperature: -40 degrees to +70 degrees
- Power supply: DC5V or DC9-36V

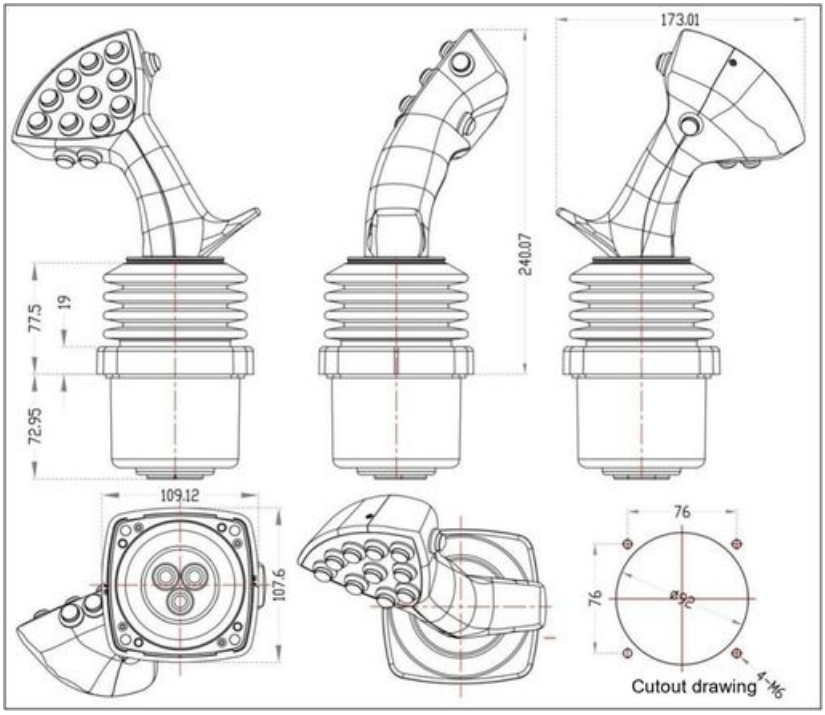

MKF-JS12 (Both left and right handles)



- The same feel as the hydraulic control; spring returns to the neutral position
- Various operation ranges such as straight / cross / square / T-shape / H-shape, etc.
- Signal output: 0.5-4.5V, RS422, RS232, CAN, USB, switch, etc.
- IP65 protection; temperature: -40 degrees to +70 degrees
- Power supply: DC5V or DC9-36V

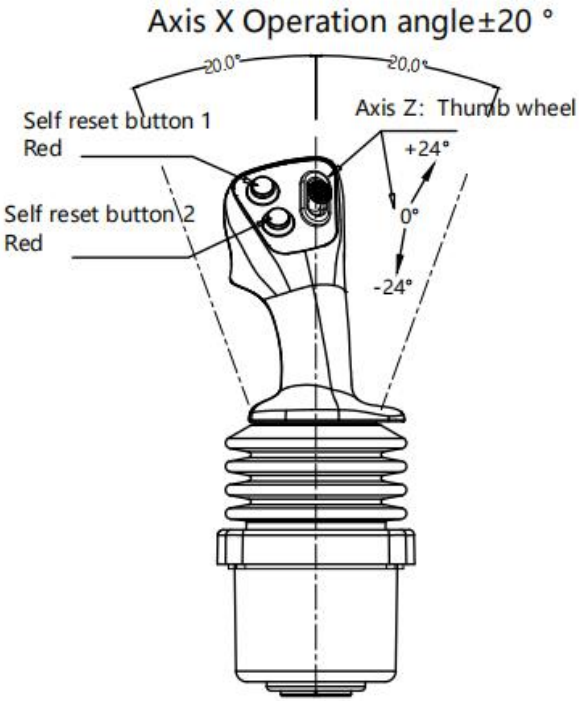

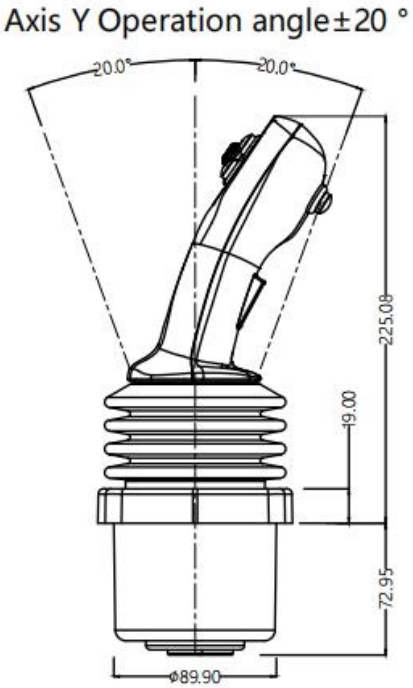

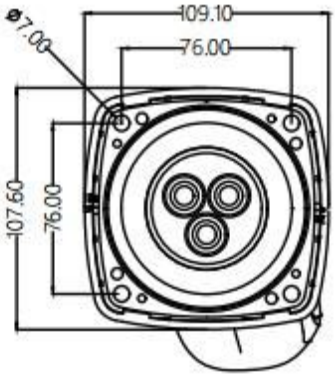

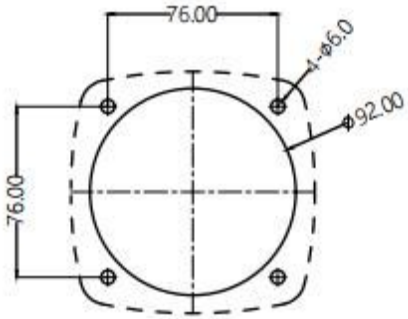

H56-JS12 series Joystick



Compact base, suited to installations where space is limited. Spring return to centre; square, cross or in-line gate optional; operating angle +/-15 or +/-20 degrees. CAN output, supply 10-36V.

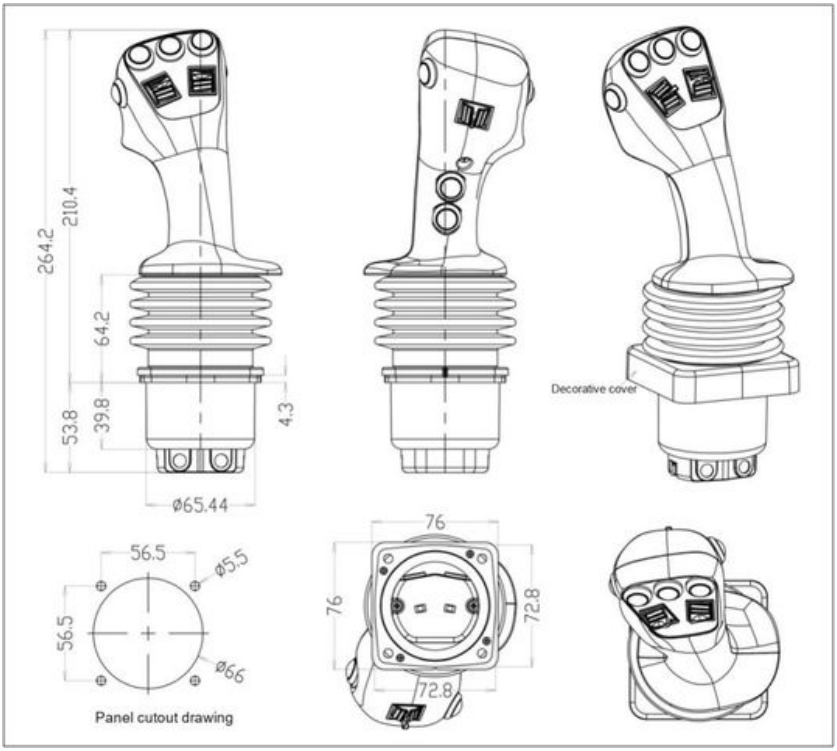

MKF-JS13 (Both left and right handles)





- Ergonomic design, same feel as hydraulic control, suitable for engineering machinery control and agricultural machinery industry;
- Number of axes: supports 1-4 axes;
- Return method: spring return/friction brake/X spring return + Y friction brake
- Operation range: straight limit, cross limit, square limit, T-shaped, H-shaped and other operating ranges;
- Signal output: voltage 0.5-4.5V, current 4-20mA, RS422, RS232, CAN, USB, etc.;
- Protection: IP65 protection;
- Temperature: -40 degrees ~ +70 degrees;
- Life span is greater than 5 million times;
- Power supply DC5V or DC10-36V;

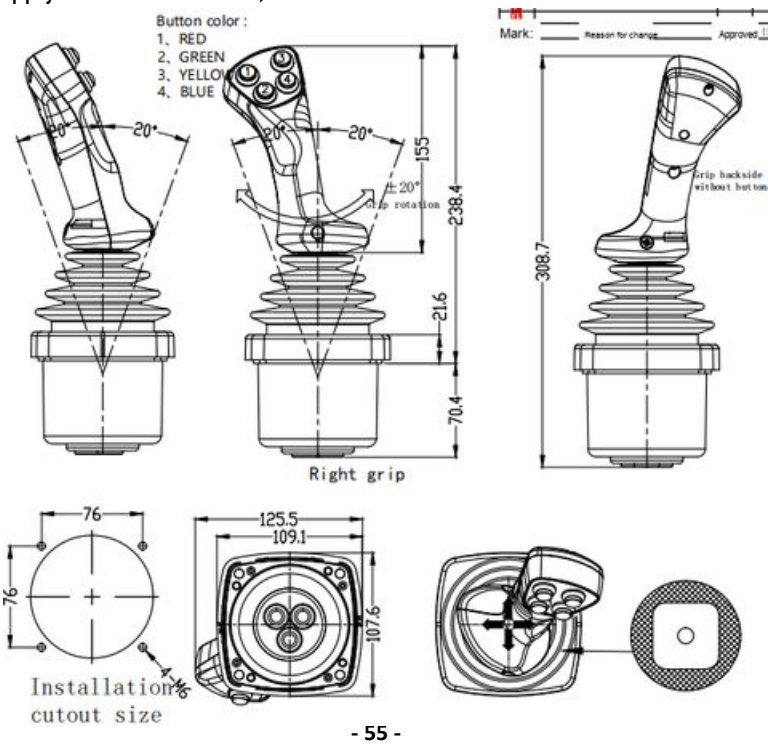

MKF-JS13-V1 Dedicated handle for low-altitude aircraft



- A flight control handle designed specifically for aircraft. Metal and plastic composite structure, small in size and light in weight.
- Redundant sensors with failure detection; dual isolated CAN communication. Higher reliability and safety, and more direct, intuitive control.
- Four-axis proportional control: forward, backward, left, right, rotation and lift.
- Signal output: isolated CAN x 2ch, RS232 TTL x 1ch, RS232 x 1ch
- Supply: DC10-36V

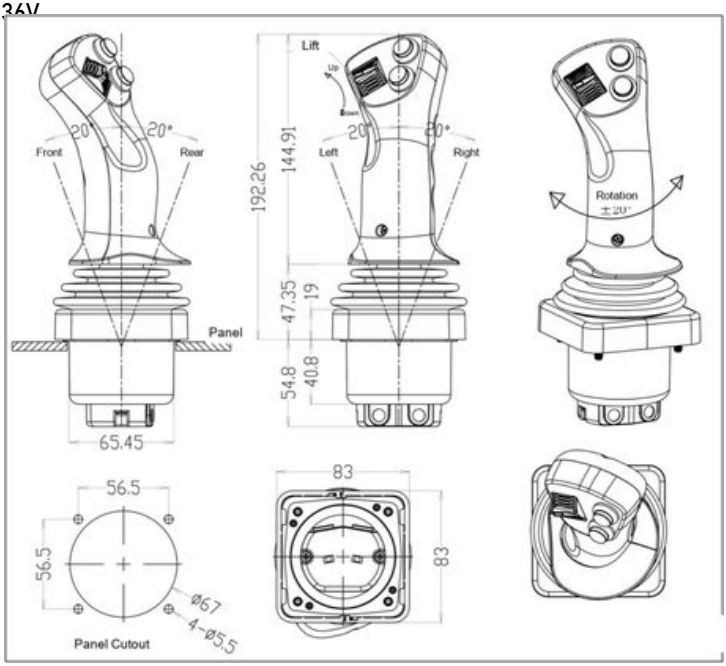

MKF-JS14



- Same as the hydraulic control feel
- Multi-axis: XY axis, XYZ axis, Z axis handle ±30 degree rotation (optional)
- Hall sensor; with vibration feedback
- Any combination of spring return and friction positioning
- Straight/cross/square/T-shaped/Z-shaped limit
- Signal output (0.5-4.5V, RS422, RS232, CAN, USB, switch, etc.)
- IP65 protection; temperature: -40 degrees to +70 degrees
- Life span: more than 5 million times

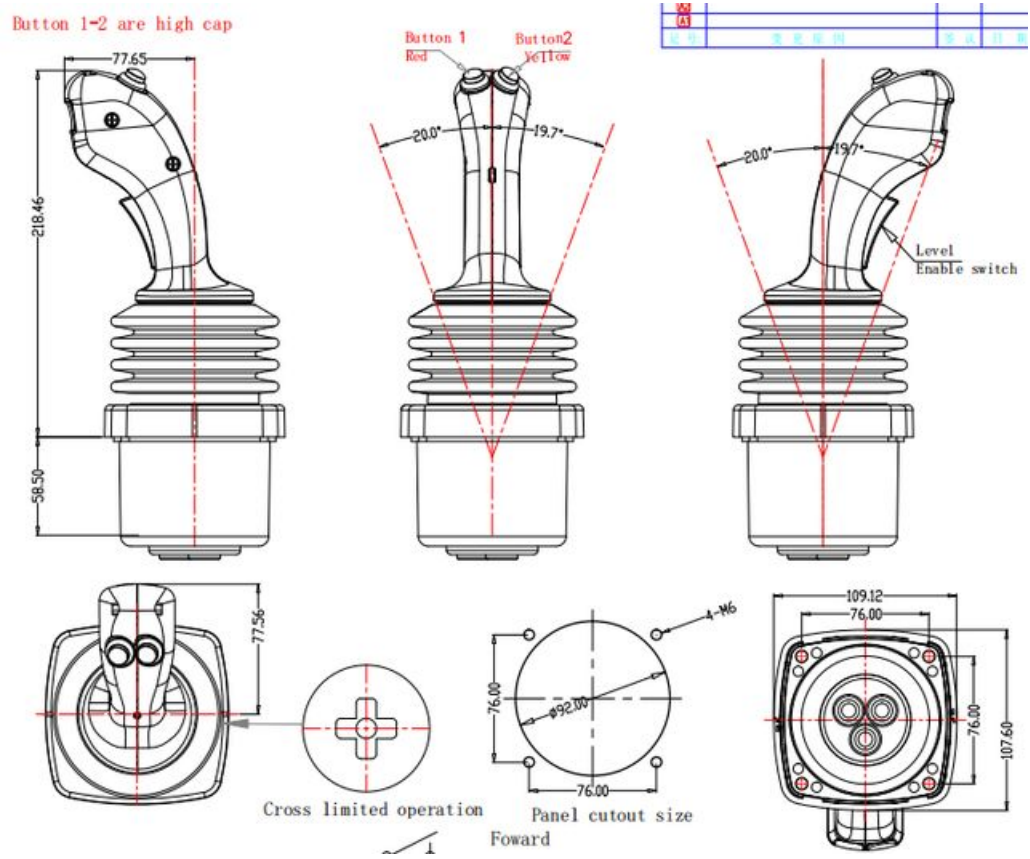

MKF-JS36



- Front/rear throttles, left/right gears
- Hall sensor
- With vibration feedback
- Y-axis friction positioning, the middle position has gear vibration feeling
- X axis: left D gear (spring return to center) middle N, right P gear
- Multiple signal output (0.5-4.5V, RS422, RS232, CAN, and switch combination, etc.)
- IP65 protection; temperature: -40 degrees to +70 degrees
- 1 enable switch, multiple waterproof button switches
- Lifespan: more than 5 million times; power supply is DC5V or DC9-36V

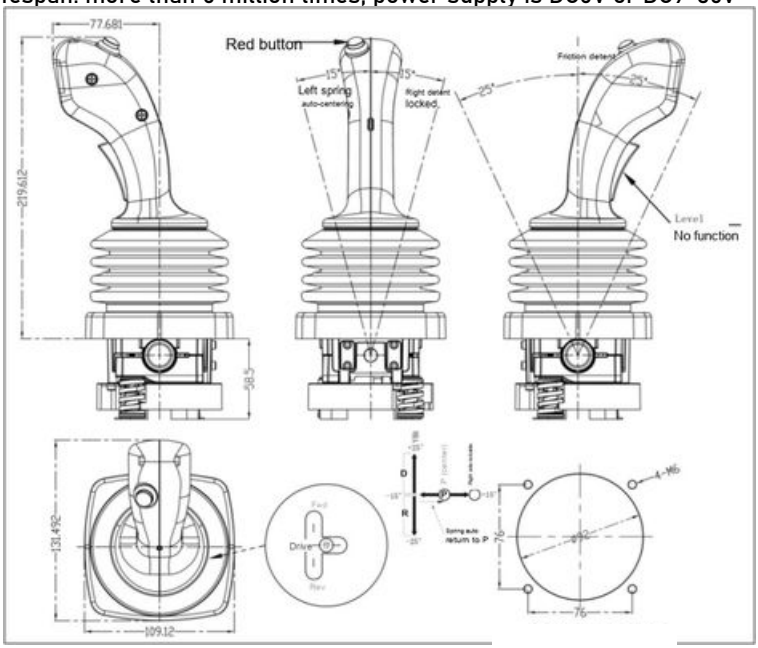

Panel cutout size

MKF-JS93



- Handle can be chose: 1 button on the top/2-way reset switch/3 position switch
- 1-2 axis, spring return, friction hold
- Straight/cross/square/T shape/H shape operation limiter optional
- Power supply: DC 5V or DC9-36V

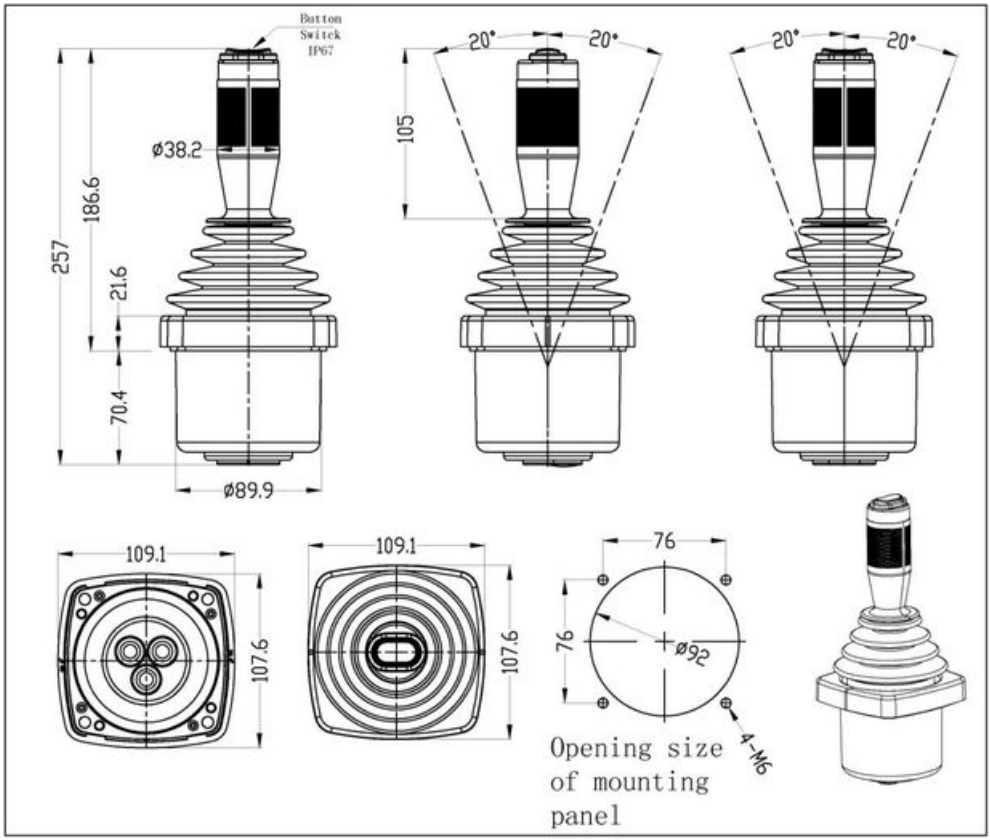

MKF-JS21 (Both left and right handles)

Used in road roller and bulldozer control.



- Front and rear throttle, left and right gear
- Y-axis friction positioning, the middle position has gear vibration feeling
- X axis: left D gear (spring return to center), Middle N gear, right P gear
- Signal output 0.5-4.5V, RS422, RS232, CAN, etc.

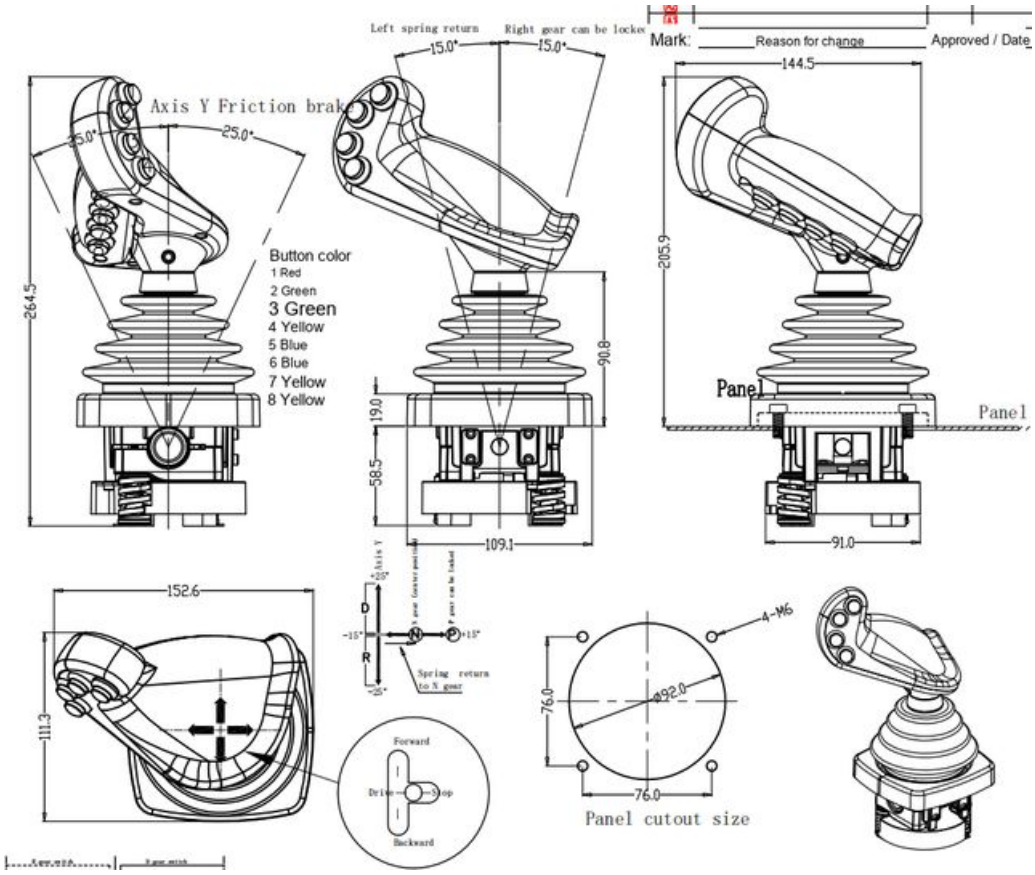

MKF-JS21B (Both left and right handles)



- Used in road rollers\bulldozers\milling machines
- Front and rear throttle, left and right gears
- Y axis: friction positioning, mid-range gear feel
- X-axis: Left and right springs return to center
- Operating range: T-shaped, H-shaped, Z-shaped
- Signal output: analog voltage, RS485, CAN, etc.;
- Power supply: DC24V

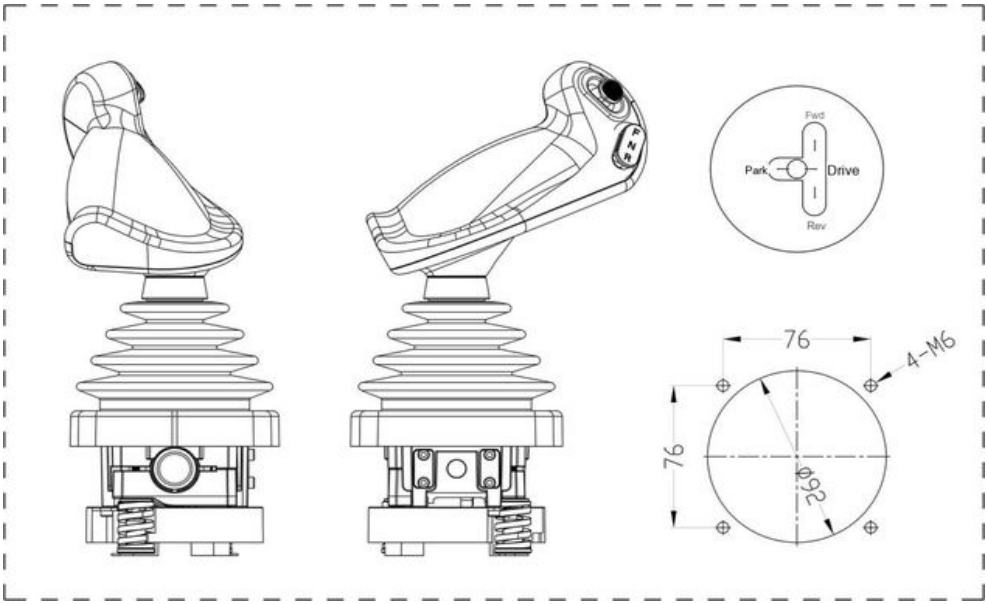

MKF-JS37 (Right handle)

Used in agricultural machinery, port machinery.



- The spring automatically returns to the neutral position
- Operation range of straight limit, cross limit, square limit, etc.
- Signal output: 0.5-4.5V, RS422, RS232, CAN
- IP65 protection; temperature: -40 degrees to +70 degrees
- Power supply: DC5V or DC9-36V

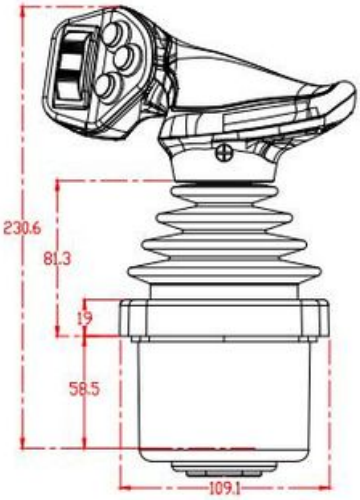

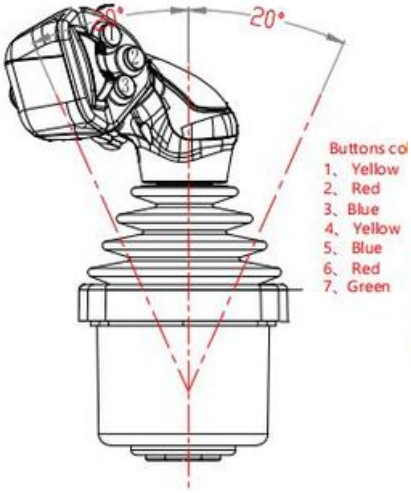

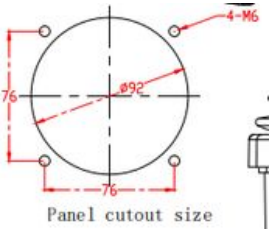

MKF-JS56



- Same tactile sensation as hydraulic control;
- Axes: 1-2 axes
- Spring return, friction positioning
- Gear position and combination settings;
- One way limit and cross limit, Square limit,
- T-shaped, H-shaped, etc;
- Signal output: 0.5-4.5V, RS422, RS232, CAN, USB
- Protection level: IP67 above the panel
- Temperature: -40 ° C to+70 ° C;
- Power supply: DC5V or DC9-36V

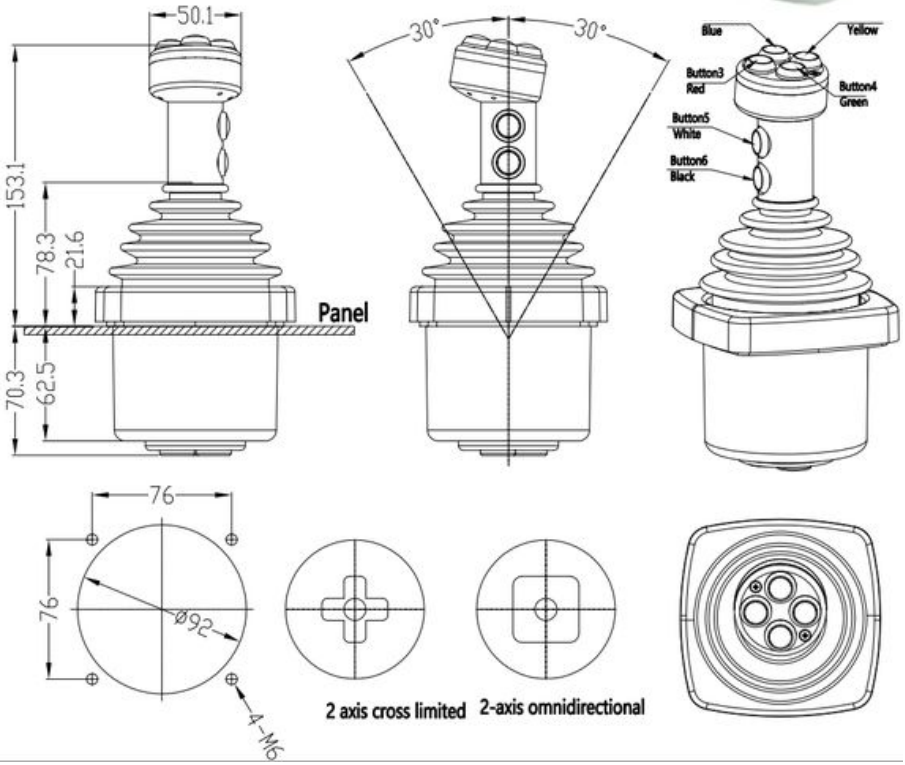

MKF-JS67





- Base axes: XY axis
- Number of axes: XY+Z
- Base operating range: universal direction
- Return mode: spring return
- Base operating angle: ±20°
- Handle: Thumb-operated Z axis, spring return
- Signal output: 0.5-4.5V, CAN
- Power supply: DC5V or DC9-36V
- Mainly used in landscaping machinery and valve tree machinery products

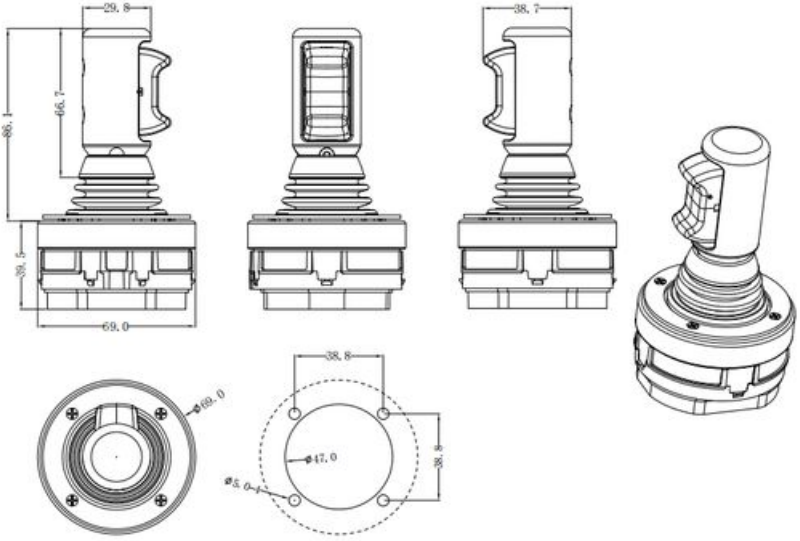

MKF-JS51



- Hall joystick controller
- Aluminum alloy material, surface anodized; Button strip
- Protective helmet to prevent accidental operation, using high-precision transmission Sensory, with a smooth operating feel.
- 2-axis, spring automatically returns to center position
- High precision Hall sensor with 16 bit accuracy
- Operating angle: ± 20 degrees
- Signal output: CAN or RS232
- Power supply: DC5V
- Protection: IP67 above the panel
- Suitable for high-precision control fields such as instruments and equipment

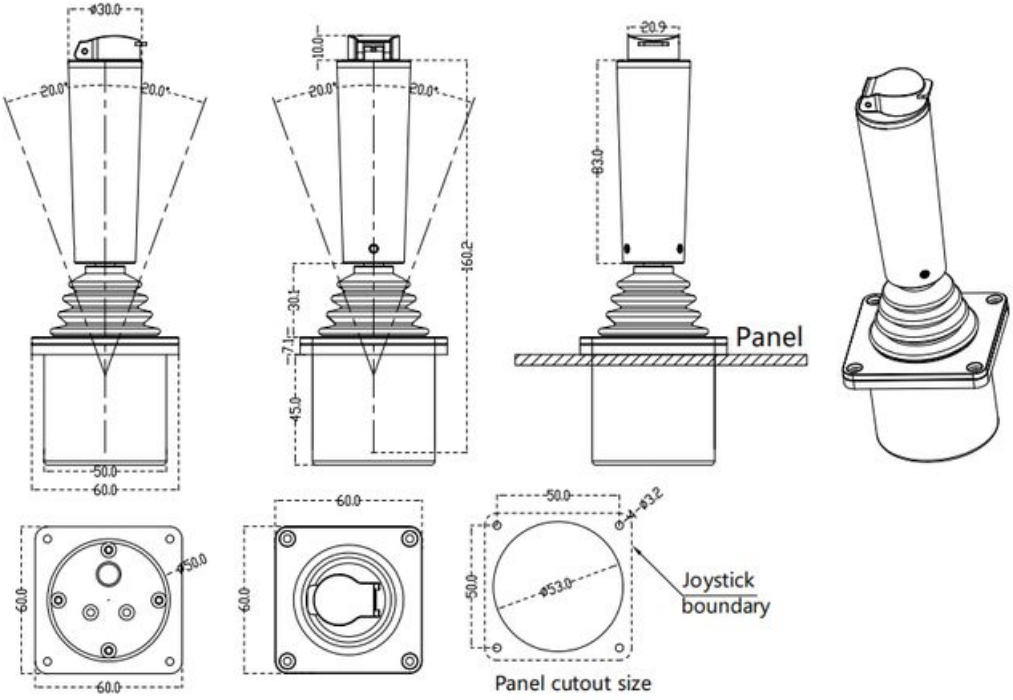

MKF-JS52 shift lever



- Handle design is ergonomic
- Number of base axes: 1 axis
- Return mode: gear or spring return
- Base operating angle: ±34°
- Signal output: switch/analog signal output/ CAN output
- Power supply: DC24V
- Protection level: IP66 above panel

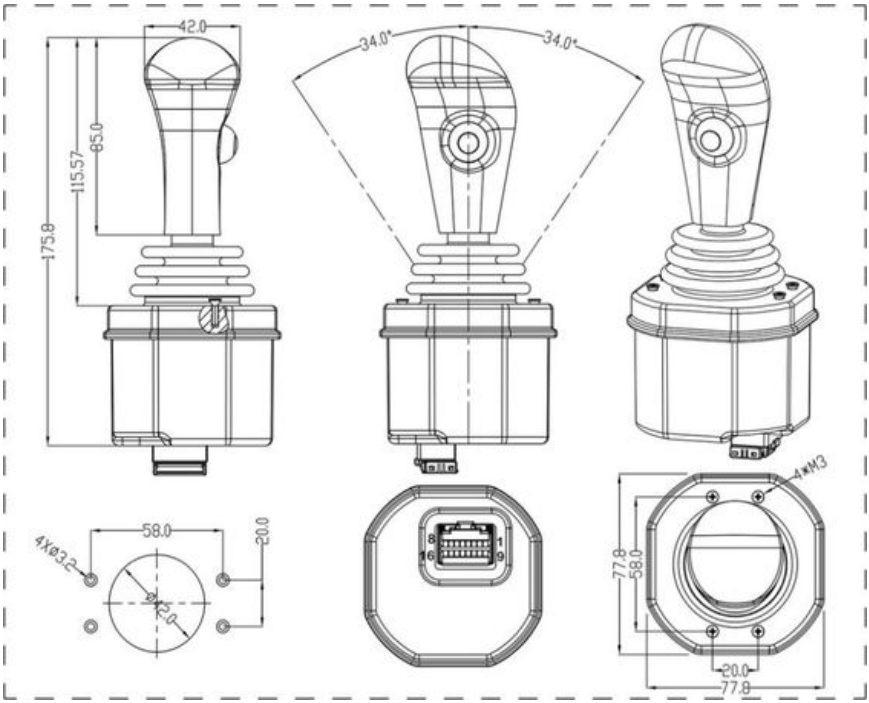

MKF-JS90



- Ergonomically Designed
- Back 2 buttons, side 1 button
- Compatible with all series of bases
- Customizable 1 button, 2 buttons, 3 buttons

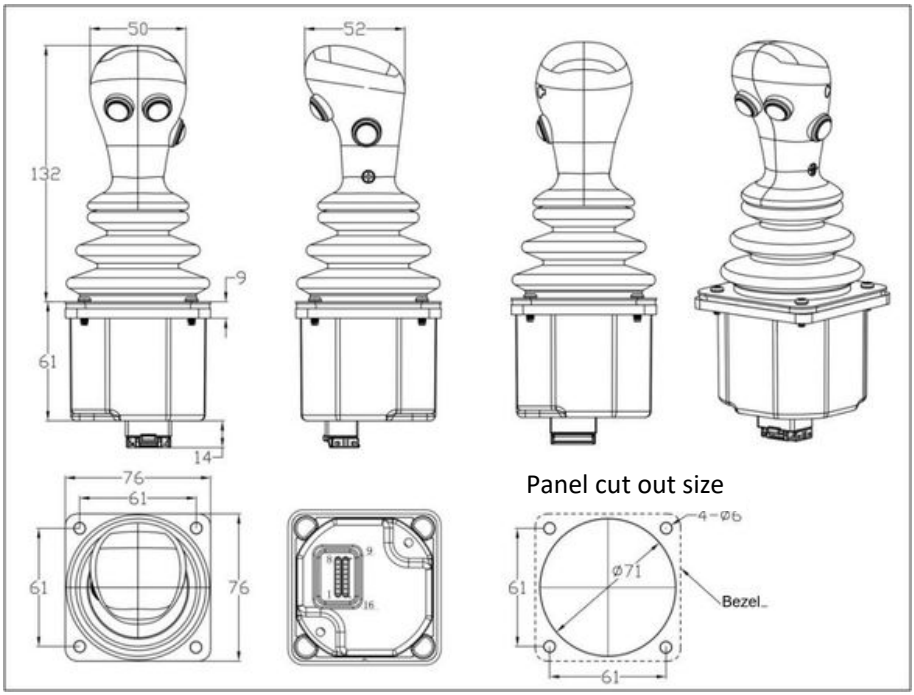

MKF-JS57



CAN bus shift lever, controls the throttle and shift functions, supplies DC24V, CAN bus signal output, used for engine and gearbox control functions.

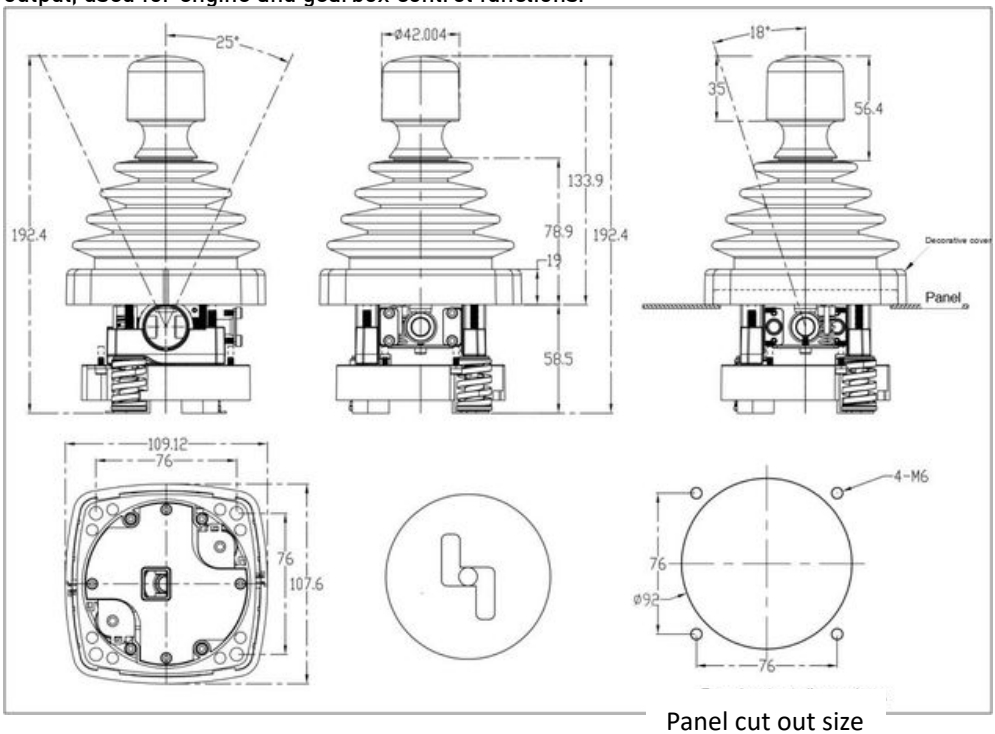

Panel cut out size

MKF-JS203

Electric cement mixer truck handle





- Specially designed for the control of electric cement mixer trucks, it has the characteristics of good waterproofing, reliable structure and long service life.
- Aluminum alloy shell, various handles can be customized
- Friction brake, mid-range feel, edge gear;
- CAN bus signal output, DC24V power supply

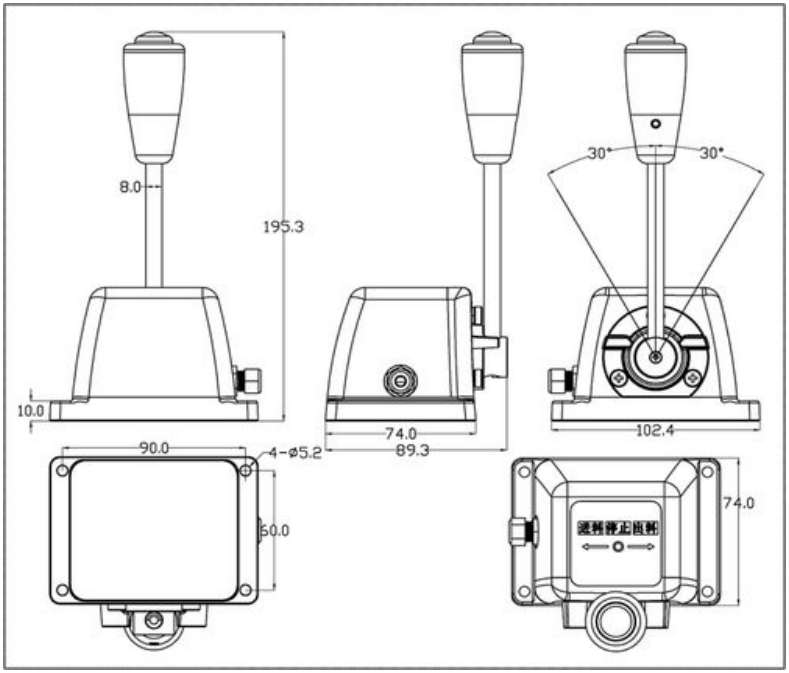

MKF-612 Single-axis joystick with electric lock



- Handle dedicated to mining dump trucks.
- Two-stage damping at both ends of the travel.
- Structure: solenoid lock at both ends plus spring return.
- Supply: DC24V
- End solenoid lock: 330 ohm @ 25 degrees C
- Solenoid operating current: 70mA @ DC24V
- Micro-switch contact rating: 1A @ DC24V
- Protection: IP65 above the panel
- Harness length: 30cm

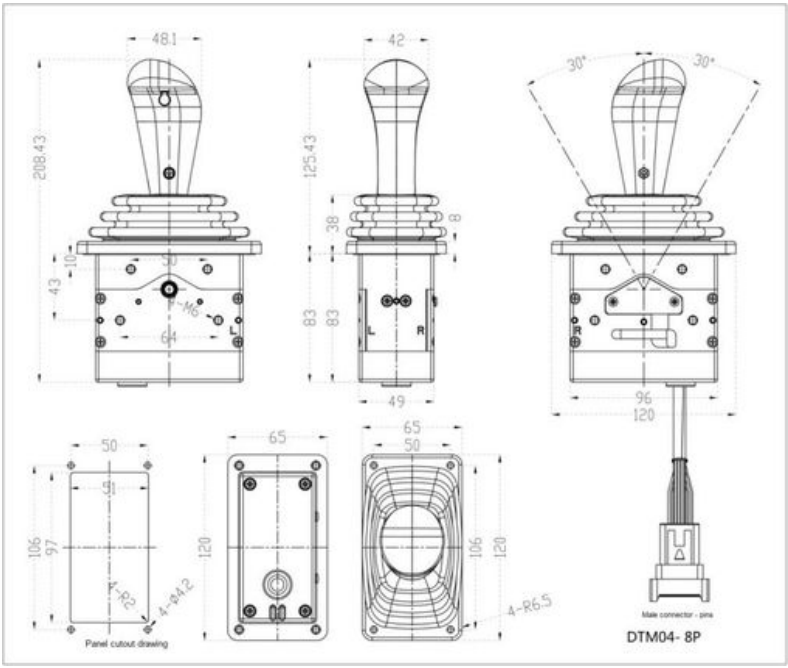

MATE TECHNOLOGY SHENZHEN LIMITED
www.matend.com
info@matend.com
0086-755-8939-8907

MKF-S202-5 Gear shift switch

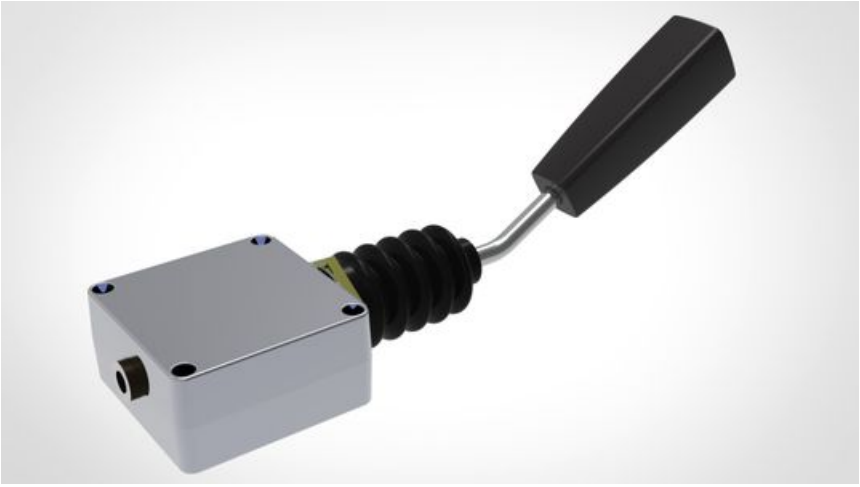

- Aluminium alloy body
- 4- or 5-position micro-switch
- Life: 500,000 cycles
- Contact rating: 1A

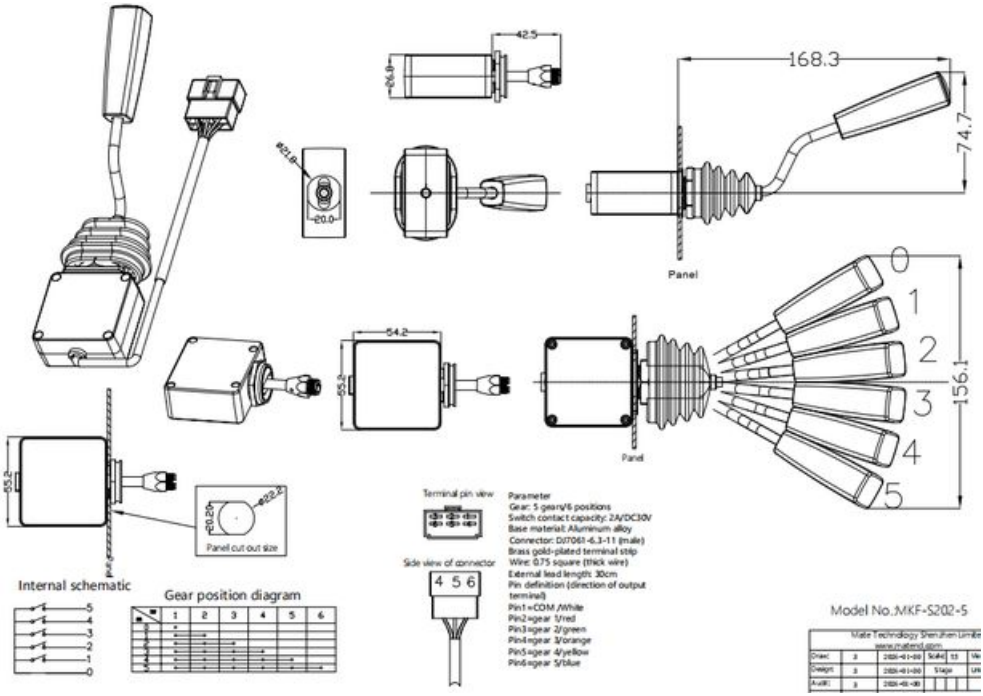

A101 Handle lever

- Single handle lever with dust boot
- Handle material: engineering plastics

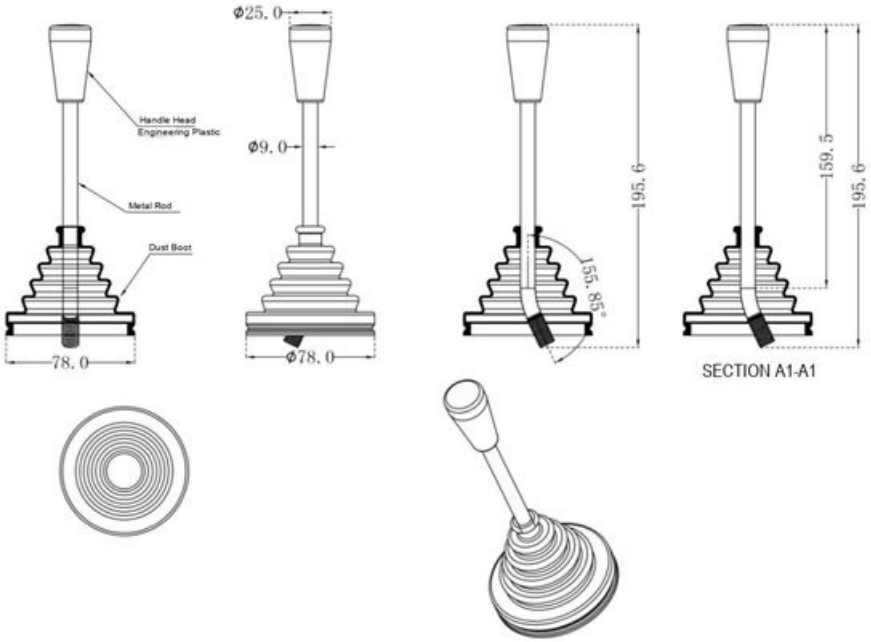

MKF-613 Modular single-axis joystick



- Modular design; several units can be ganged together in parallel.
- Function 1: detent positioning with 3-position switch output
- Function 2: spring return, angle sensor, CAN or voltage output
- Operating angle: +/-30 degrees
- Operating life: more than 500,000 cycles

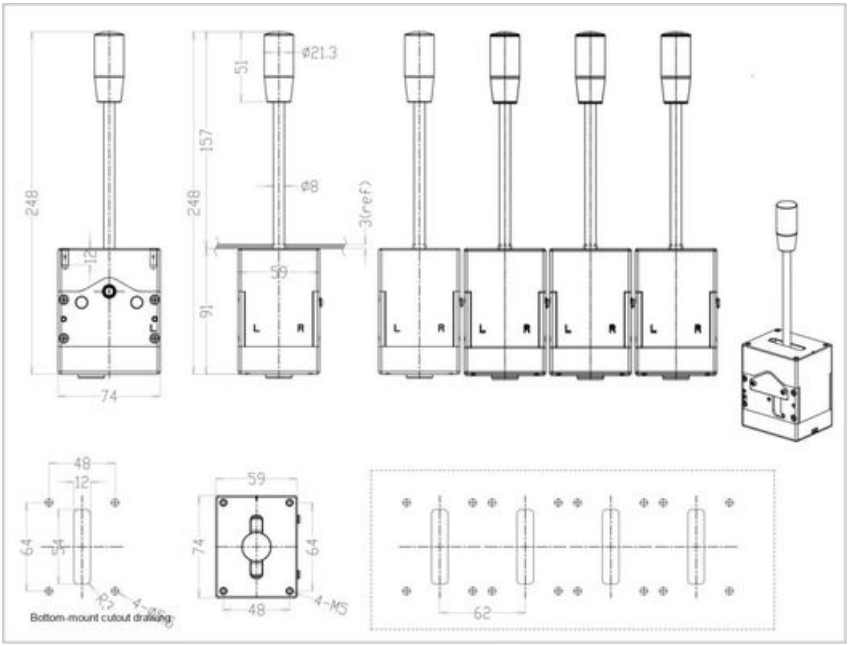

MKF-506 Master controller (port machinery)



- Master controller for port machinery.
- Enable switch built into the handle: press the handle down to enable.
- Spring return to the centre position.
- Operating pattern: in-line (single axis) or cross (two axes).
- Mechanical angle: +/-40 degrees
- Supply: DC24V (10-36V)
- Signal output: switch output (10A); Gray code output + CAN
- Power consumption: 32mA @ 5V
- Protection: IP65 above the panel

MKF-JS53

Mate Industrial Joystick, Hall sensor, multi Axis, Panel Mounted



- Spring return, single-axis or dual-axis operated
- Cross direction or arbitrary direction operated optional
- Hall effect angle detection, long life
- Various output optional

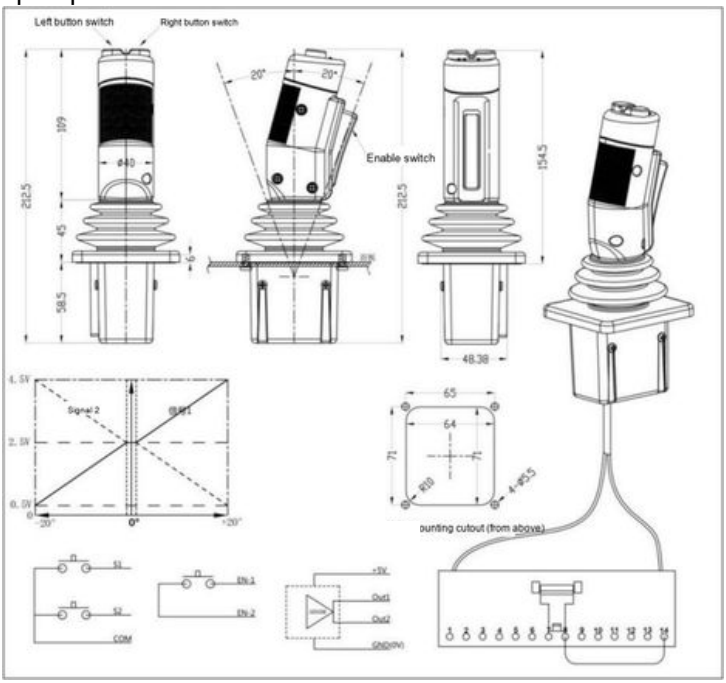

MKF-JS55

Mate Industrial Joystick, Hall effect, 2 axis, Panel Mounted



MKF-JS55 is a 2 axis Hall-type industrial joystick, instrument panel installation method, stainless steel and aluminum alloy materials, spring automatic return structure, German high-precision Hall-type sensor, full temperature range linear correction, IP65 protection level, smoother operation Feel, ergonomic mechanical design. reliable for long life span usage. This joystick is specially designed for rotary excavator and other heavy-duty or safety-critical applications.

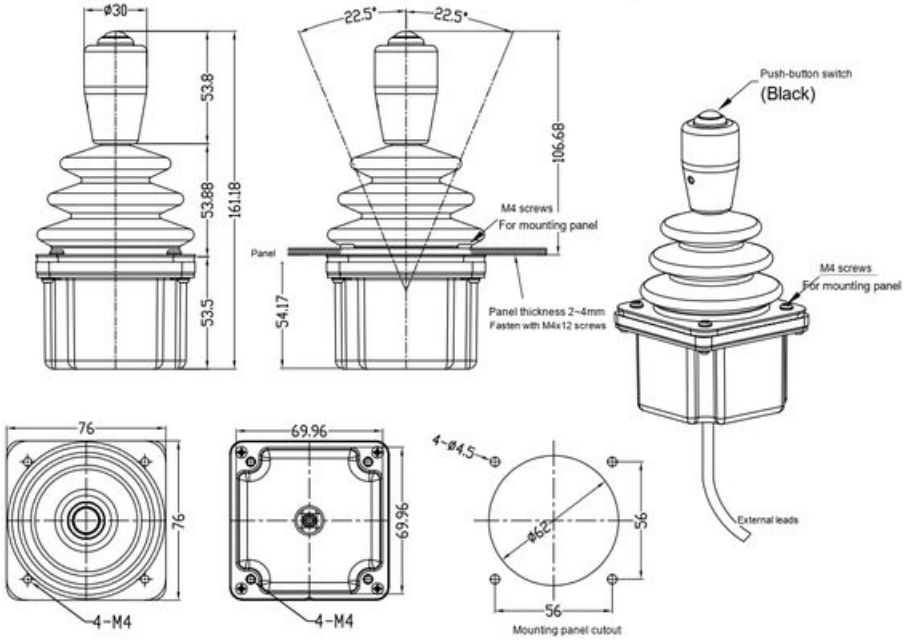

MKF-507 series Force feedback joystick



- 100% domestically produced, for simulation applications.
- Magnesium-aluminium alloy body with an anti-salt-spray surface treatment.
- Two-stage trigger switch on the back of the handle, with safety lock.
- Force feedback: two servo motors (X + Y) reproduce a wide range of force effects.
- Follow-through: the handle can rotate by itself.
- The handle can be replaced and the handle panel can be customised.
- Signal output: CAN, USB, RS232, RS422, analogue voltage and others.
- Supply: DC5V or 10-36V

MATE TECHNOLOGY SHENZHEN LIMITED
www.matend.com
info@matend.com
0086-755-8939-8907

MKF-FS02



MKF-FS02 is made of aviation aluminum alloy, which has good environmental adaptability and strong experimentation. Safe and reliable. With an ergonomic design, the handle is installed with momentary push buttons, one trigger switch and one force sensor joystick. Mainly used in construction machinery, aerospace equipment. The protection level can reach IP65, the handle can be equipped with various types of switches, and the sensor can achieve the implementation of related functions. The handle panel can be customized, with signal output of CAN, USB, RS232, RS422, analog voltage, etc.

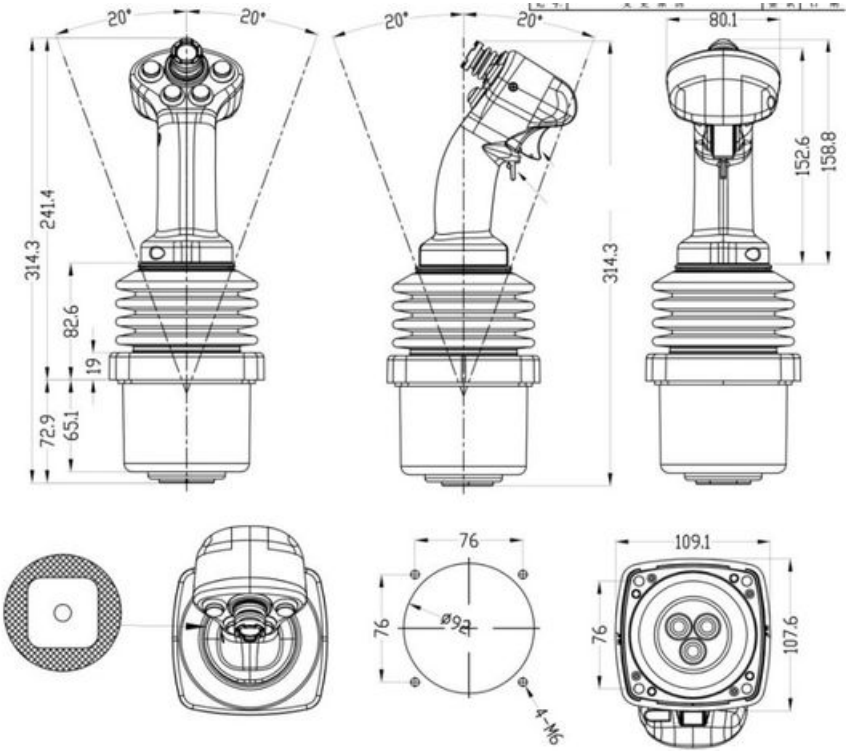

MKF-JS89



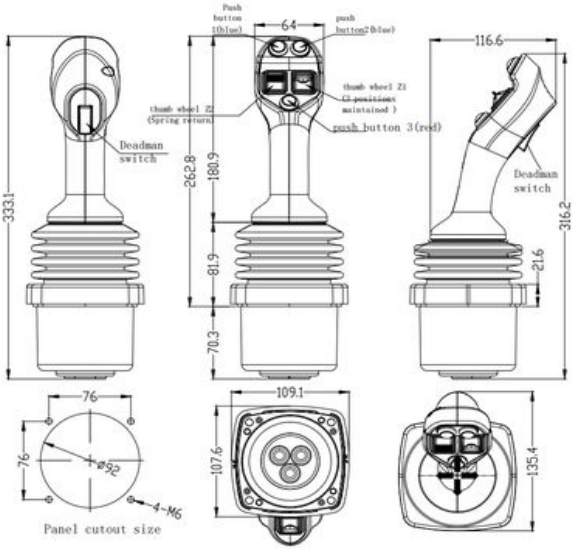

MKF-JS89 is a multi axis Hall-type industrial joystick, instrument panel installation method, stainless steel and aluminum alloy materials, spring automatic return structure, German high-precision Hall-type sensor, full temperature range linear correction, IP65 protection level, smoother operation Feel, ergonomic mechanical design. reliable for long life span usage. This joystick is widely used in TV camera, CCTV, industrial robot, medical equipment, optical instrument, heavy-duty and safety-critical applications.

MKF-JS60

Mate Industrial Joystick, Hall effect, multi axis. Panel Mounted







MKF-JS60 is a multi axis Hall-type industrial joystick, instrument panel installation method, stainless steel and aluminum alloy materials, spring automatic return structure, German high-precision Hall-type sensor, full temperature range linear correction, IP67 protection level, smoother operation Feel, ergonomic mechanical design. Reliable for long life span usage. This joystick is widely used for controllable equipment: port machinery,crane, aerial work vehicle, grader, engineering equipment armrest box, electronically controlled cab, etc.

- Base: 2 axes, the feel is the same as the hydraulic control
- Base return method: spring return/friction positioning/friction and spring return combination
- Base operation range: omnidirectional square, cross, in-line, Z-shaped, H-shaped, various can be customized
- Signal output: analog voltage 0.5-4.5V, CAN, RS422, RS232, USB, etc.;
- Power supply: DC24V
- IP65 protection; temperature: -40 degrees ~ +70 degrees;
- Lifespan: average lifespan is greater than 1 million times;

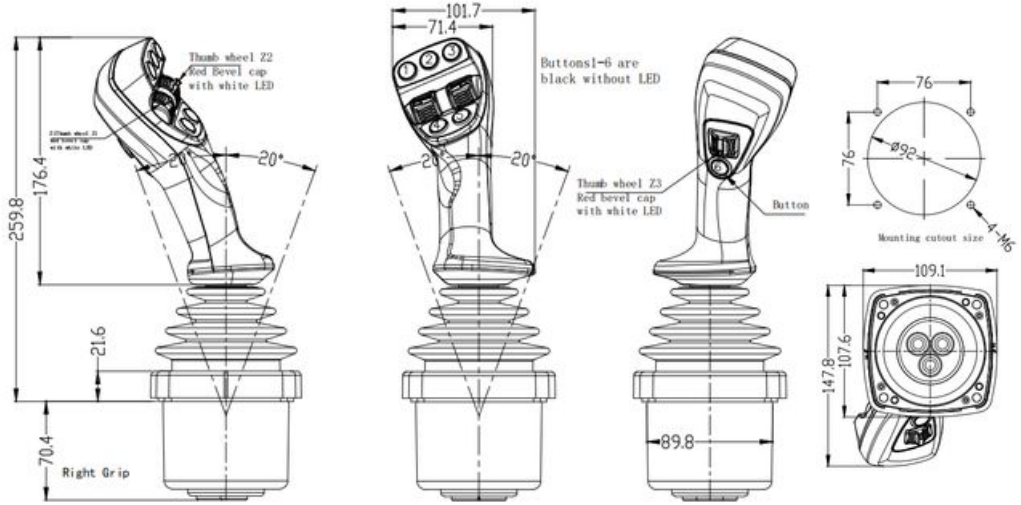

MKF-JS60B series Joystick (left and right hand)



Professional industrial design, 100% domestically produced. Spring return and friction detent are configurable; a variety of signal outputs is available.

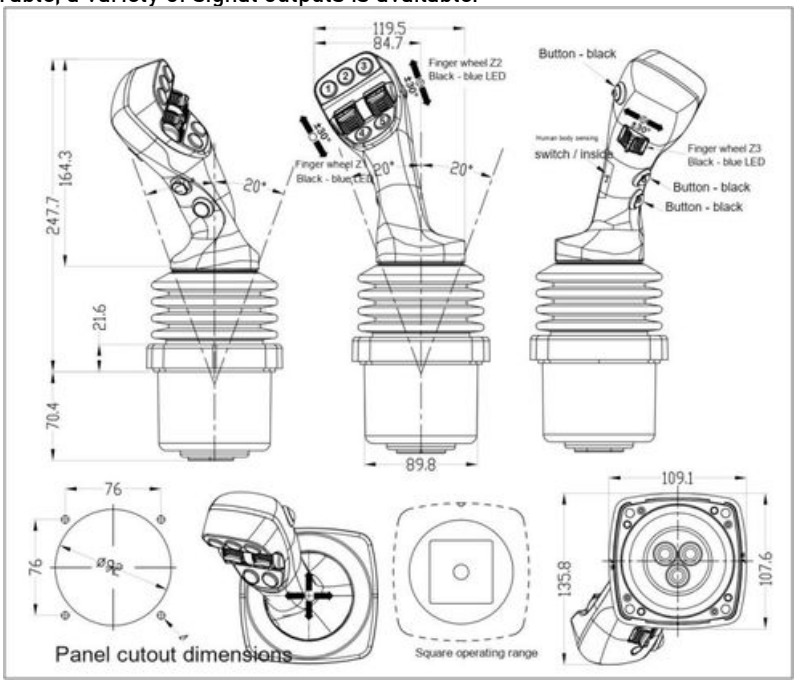

MKF-JS60B-2 series Joystick



- Professional industrial design, 100% domestically produced.
- Base: 2-axis spring return, friction damping detent, or a combination of both
- Backlit buttons with a wide choice of custom icons
- Number of buttons: up to 8 push buttons
- Thumb wheels: 3
- Human presence: built-in capacitive presence switch
- Feedback: built-in programmable vibration motor
- Supply: DC10-36V
- Signal output: CAN

MKF-JS69

For excavators



MKF-JS69 is a multi axis Hall-type industrial joystick, instrument panel installation method, stainless steel and aluminum alloy materials, spring automatic return structure, German high-precision Hall-type sensor, full temperature range linear correction, IP67 protection level, smoother operation Feel, ergonomic mechanical design. Reliable for long life span usage. This joystick is widely used for controllable equipment: port machinery,crane, aerial work vehicle, grader, engineering equipment armrest box, electronically controlled cab, etc.

- Base: 2 axes, the feel is the same as the hydraulic control
- Base return method: spring return/friction positioning/friction and spring return combination
- Base operation range: omnidirectional square, cross, in-line, Z-shaped, H-shaped, various can be customized
- Signal output: analog voltage 0.5-4.5V, CAN, RS422, RS232, USB, etc.;
- Power supply: DC24V
- IP65 protection; temperature: -40 degrees ~ +70 degrees;
- Lifespan: average lifespan is greater than 1 million times;

MKF-JS63

Mate Industrial Joystick, Hall effect, multi axis, for armrest box






- Buttons: 4 backlit buttons + 1 thumb wheel (with backlight)
- Number of axes: 2 axes, spring automatically returns to the center
- Gear position: no mechanical gear / edge belt gear optional
- Operating range: square, others can be customized
- Operating angle: ±20°
- Signal output: 0.5-2.5-4.5V
- Power supply: DC5V
- Left and right handle available

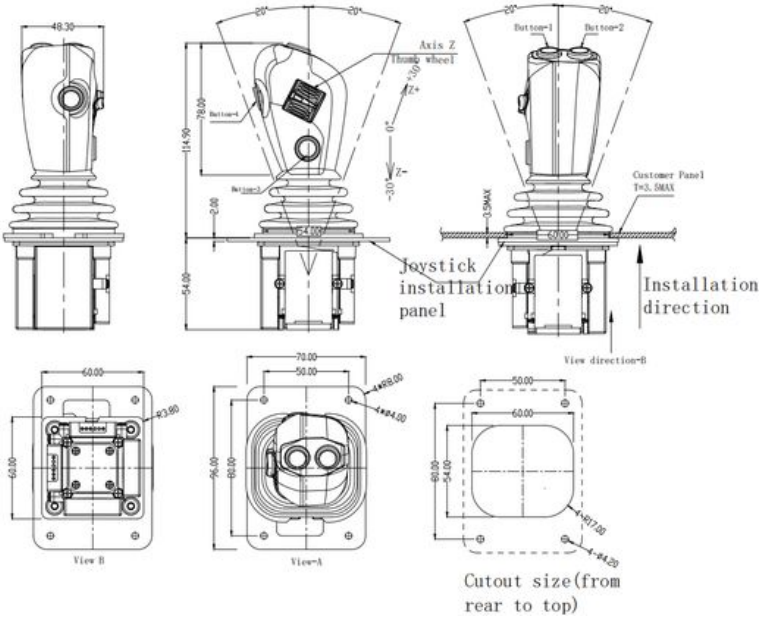

MKF-JS102



MKF-JS102 is a multi axis Hall-type industrial joystick, instrument panel installation method, stainless steel and aluminum alloy materials, spring automatic return structure, German high-precision Hall-type sensor, full temperature range linear correction, IP67 protection level, smoother operation Feel, ergonomic mechanical design. Reliable for long life span usage. This joystick is widely used for controllable equipment: port machinery,crane, aerial work vehicle, grader, engineering equipment armrest box, electronically controlled cab, etc.

- Base: 2 axes, the feel is the same as the hydraulic control
- Base return method: spring return/friction positioning/friction and spring return combination
- Base operation range: omnidirectional square, cross, in-line, Z-shaped, H-shaped, various can be customized
- Signal output: analog voltage 0.5-4.5V, CAN, RS422, RS232, USB, etc.;
- Power supply: DC24V
- IP65 protection; temperature: -40 degrees ~ +70 degrees;
- Lifespan: average lifespan is greater than 1 million times;

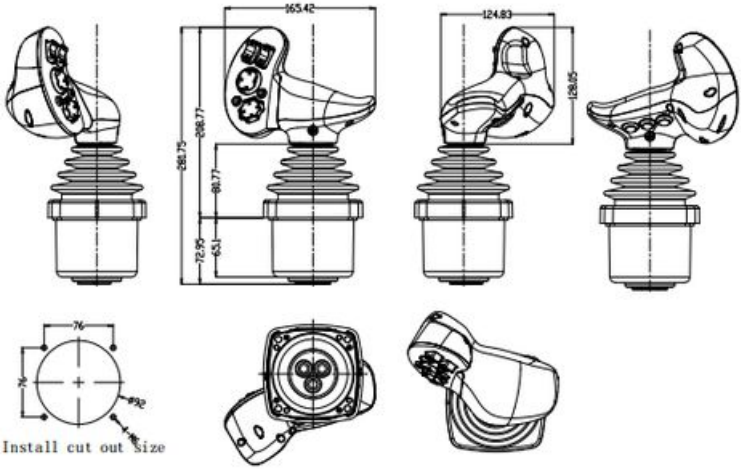

MKF-JS103



- Unique patented design
- Multiple structures
- Spring return, Friction positioning or a combination of both can be customized with multiple control methods
- Signal output: voltage 0.5-4.5V, current 4-20mA, RS422, RS232, CAN, USB, etc;
- Protection: IP65 protection;

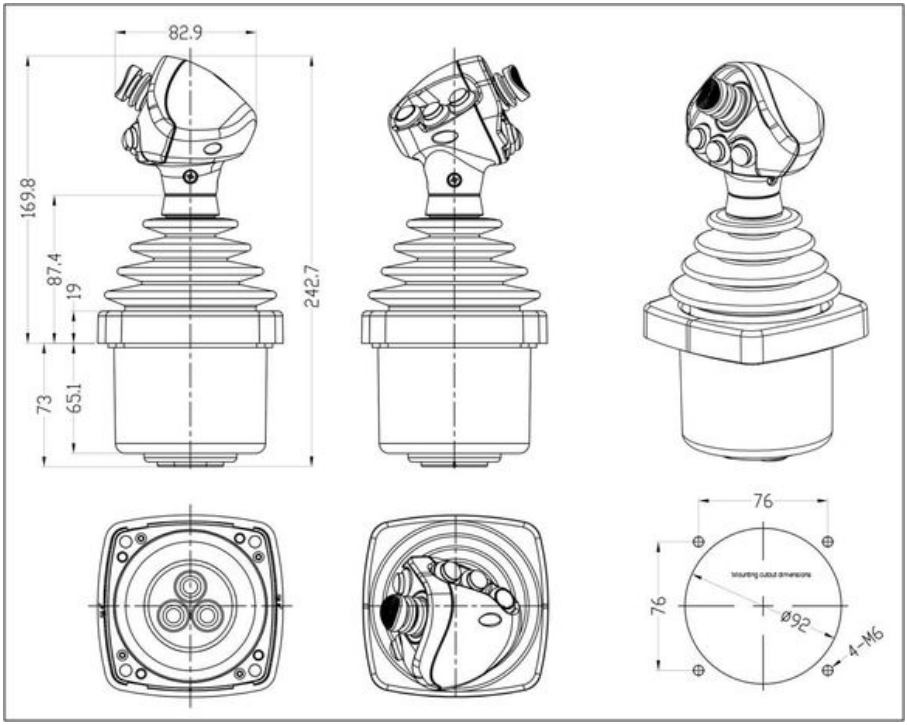

MKF-JS15

Friction resistance positioning, Dedicated for unmanned boats, anti-salt fog



3 axis with button　　3 axis without button

- Stainless steel structure, panel IP65 protection, anti-salt spray, sensor and circuit waterproof design;
- 1 axis, 2 axis, 3 axis, friction resistance positioning, the center mechanical gear position of each axis, the gear position feels obviously
- square bounds/cross limit/one word limit
- High-precision Hall sensor, linear correction in the whole temperature range, Smooth operation feel
- Multiple signal output options
- Waterproof button design
- Applicable to the control of unmanned ships, unmanned boats, ships, etc.
- Suitable for ship hydraulic control and other fields
- Operation angle: ±30 degrees
- Signal output: 0.3-4.7V, RS232, RS422, CAN
- Power supply: DC5V/DC12V/DC24V

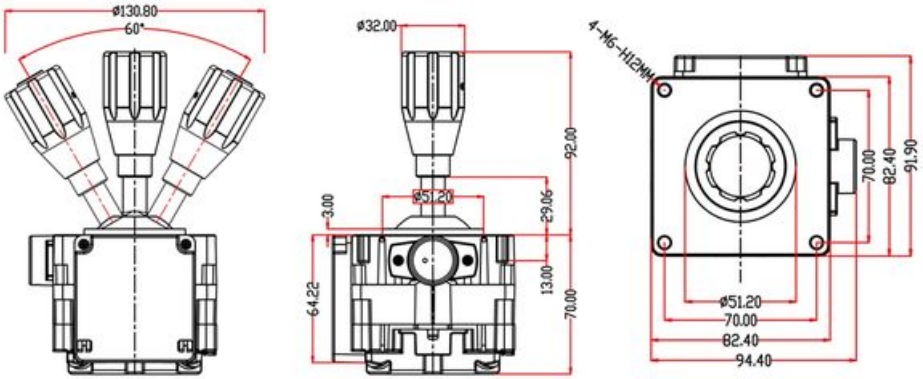

MKF-JS70

Special joystick for unmanned boat,Friction resistance positioning





- 3-axis, friction resistance positioning, smooth operation feel
- The center mechanical gear, the gear feels obvious;
- High precision hall sensor
- Operating angle: ±30 degrees
- Signal output: 0.3-2.5-4.5V
- Power supply: DC5V
- Protection: IP67 above the panel
- Suitable for control of unmanned ships, unmanned boats, ships, etc.;

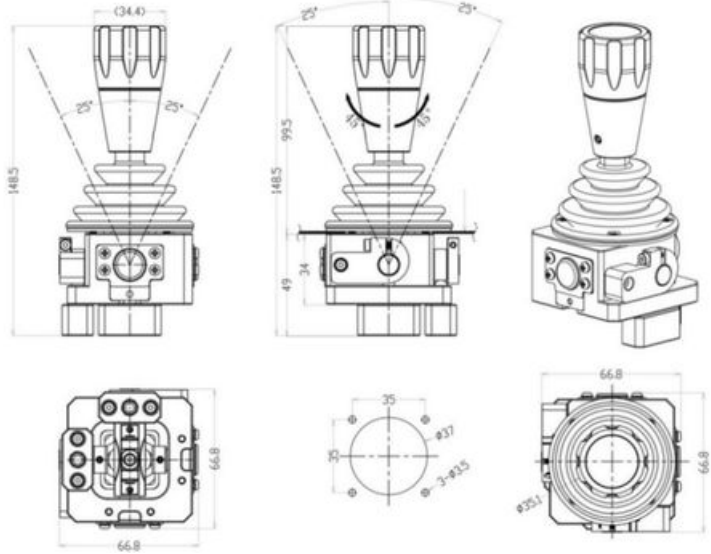

MKF-JS71



Ship azimuth engine controller

- Full-turn propeller control, with propeller angle and speed control functions, suitable for large-scale ship control.
- Multiple signal output: analog voltage signal 0.5-4.5V; analog current signal 4-20mA.
- Horizontal angle: 360 degrees continuous
- Vertical angle: 0-75°/or ±60°

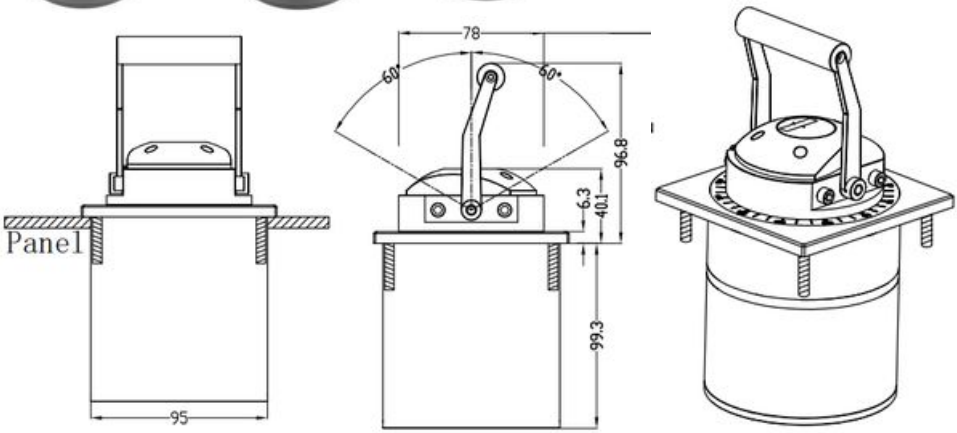

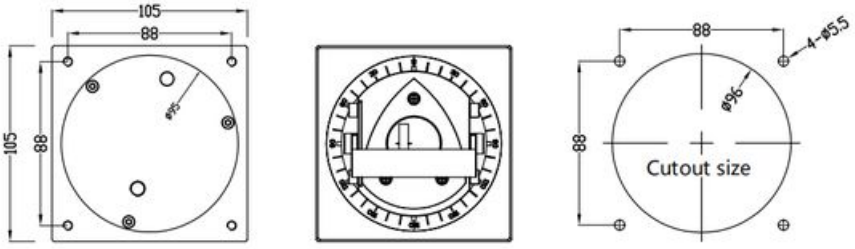

MKF-JS72 Ship azimuth engine controller

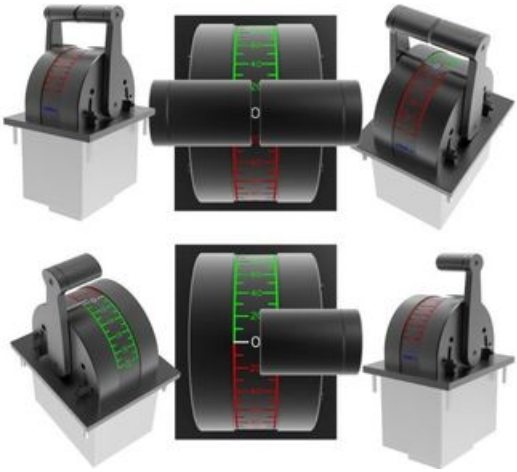

MKF-JS72 Dual engine throttle controls. It is suitable for ship engine throttle control, can control 2 engines, and has throttle control and gear control functions. There are 11 mechanical gears (5 gears at the front and rear), and the PVC scale has adjustable backlight. Using Hall sensor, full temperature range linear compensation, left and right signal output and RS485 signal are completely isolated; linear surface lighting technology, backlight brightness is adjustable.

Aluminum alloy shell, surface anodized, using nano friction brake material, has a good feel.

- Operating angle: 140 ° (± 70 °)
- Gear position: 11th gear (5th forward, 5th reverse, 1st middle)
- Each gear has a graduated feel
- Synchronous control: dual servo stepper motor and electromagnetic clutch mechanism
- Equipped with remote synchronization control function
- Signal output: current 4-20mA+RS485
- Power supply: DC24V (DC10V/DC36V)
- Operating temperature: -40 ℃~+70 ℃
- Protection: IP67 above the panel

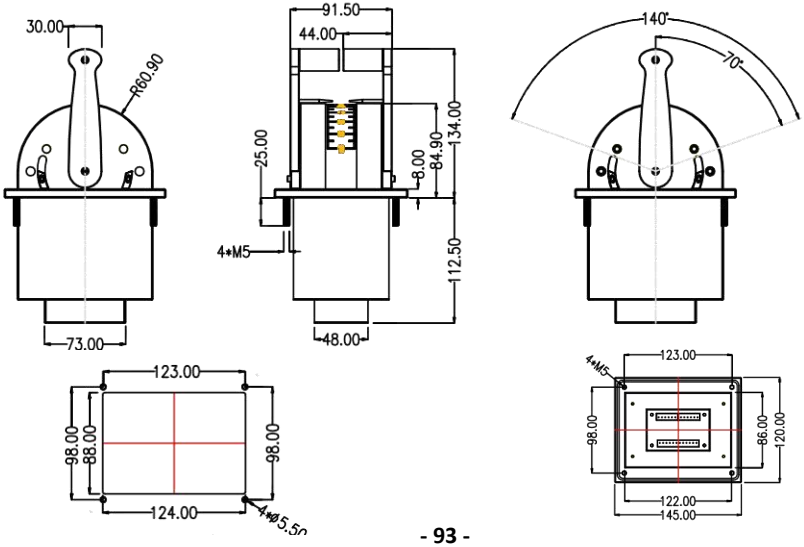

MKF-JS72-S mini size ship azimuth engine controller

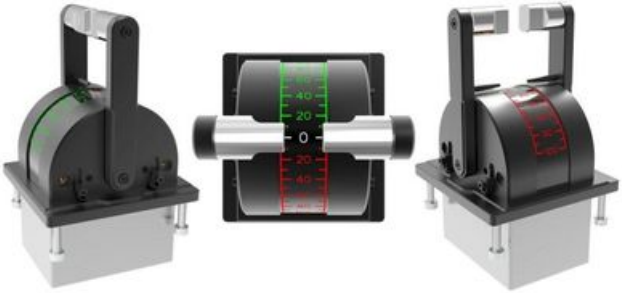



MKF-JS72-S mini size dual engine throttle controls. suitable for ship engine throttle control, can control 2 engines, and has throttle control and gear control functions. There are 11 mechanical gears (5 gears at the front and rear), and the PVC scale has adjustable backlight. Using Hall sensor, full temperature range linear compensation, left and right signal output and RS485 signal are completely isolated; linear surface lighting technology, backlight brightness is adjustable.Aluminum alloy shell, surface anodized, using nano friction brake material, has a good feel.

- Operating angle: 140 ° (± 70 °)
- Gear position: 11th gear (5th forward, 5th reverse, 1st middle)
- Each gear has a graduated feel
- Synchronous control: dual servo stepper motor and electromagnetic clutch mechanism
- Equipped with remote synchronization control function
- Signal output: current 4-20mA+RS485
- Power supply: DC24V (DC10V/DC36V)
- Operating temperature: -40 ℃~+70 ℃
- Protection: IP67 above the panel

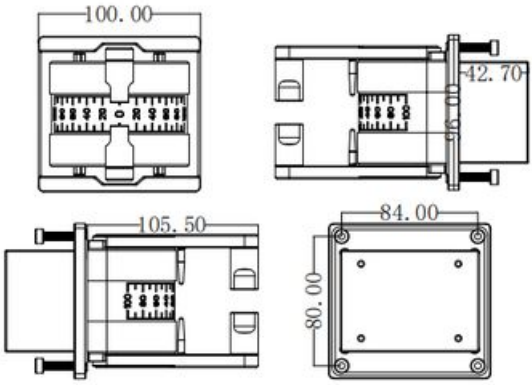

Panel cutout size

MKF-JS77 Side-mounted two engine controller






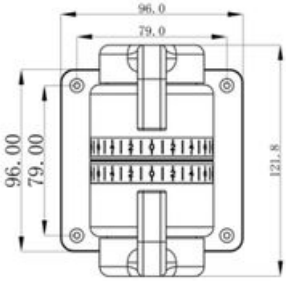

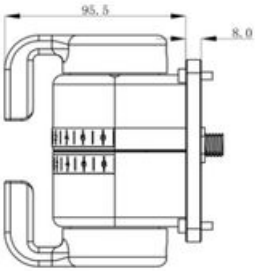

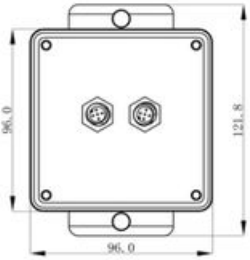

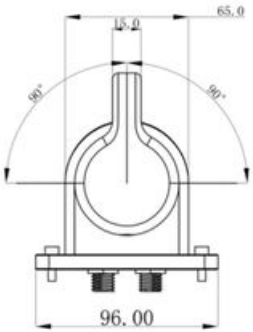

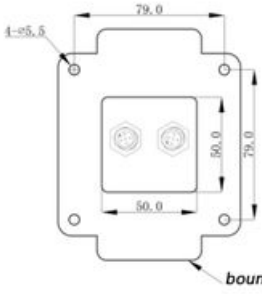

panel cut out size

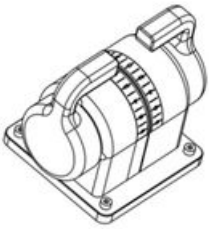

MKF-JS79 Side-mounted single engine controller



Stainless steel 316 with salt-spray resistant finish. Waterproof: IP67 waterproof. Gear: Three mechanical gears (F, R, and N) in the middle. Mechanical angle: 12 degrees between F and R. Angle between forward throttle and neutral: 70 degrees. Angle between reverse throttle and neutral: 50 degrees. Signal output: Dual CAN communication interfaces. No internal 120R communication matching resistor. F and R positions have switching outputs, with a contact capacity of 3A. Power supply: 24V DC (10-36V). Current consumption: 50mA @ 24V DC.

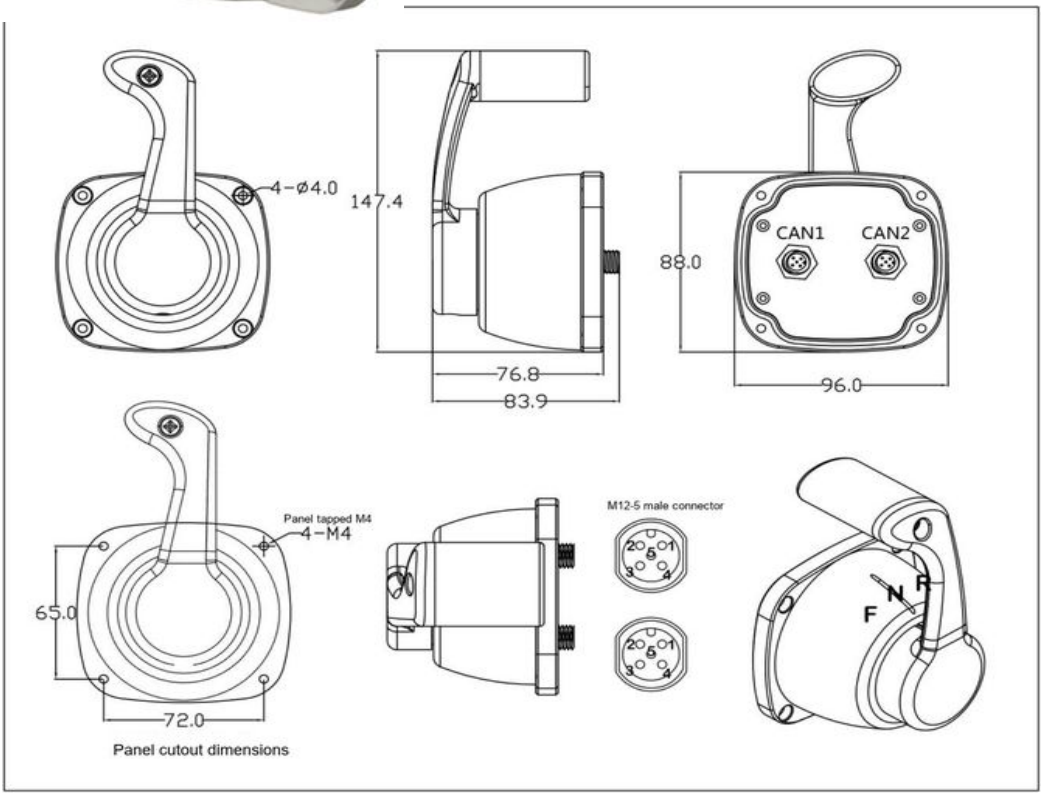

MKF-JS16 Engine controller



MKF-JS16 dual engine throttle controller. Suitable for ship engine throttle control, can control 2 engines, with throttle control and gear control functions. With CAN communication indication, synchronization indication, error indication function. Adopt dual-channel Hall sensor, full temperature range linear compensation, stainless steel shell, waterproof and salt spray design, friction resistance positioning, 3 mechanical gears (DNR).

- Sensor: Double Hall sensor
- Operation angle: 156 degrees
- Center gear: 3 gears (DNR) Lifespan: more than 5 million times
- Power supply: DC5V/DC12V/DC24V Signal output: analog voltage 0-5V, CAN, RS485
- Operating temperature: -40℃～+70℃ Protection: IP67

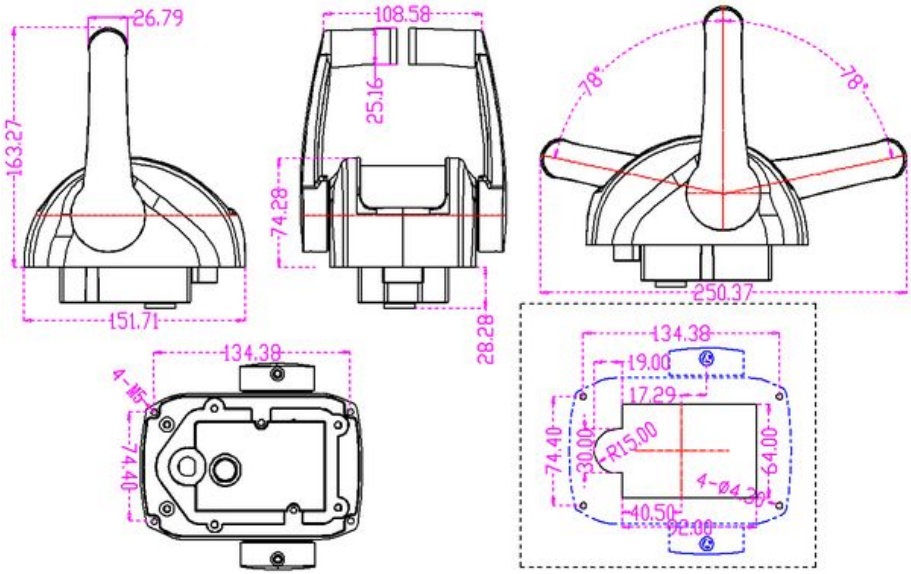

MKF-JS16-V1 Engine controller



MKF-JS16-V1 dual engine throttle controller. Suitable for ship engine throttle control, can control 2 engines, with throttle control and gear control functions. With CAN communication indication, synchronization indication, error indication function. Adopt dual-channel Hall sensor, full temperature range linear compensation, stainless steel shell, waterproof and salt spray design, friction resistance positioning, 3 mechanical gears (DNR).

- Sensor: Double Hall sensor
- Operation angle: 156 degrees
- Center gear: 3 gears (DNR)
- Lifespan: more than 5 million times
- Power supply: DC5V/DC12V/DC24V
- Signal output: analog voltage 0-5V, CAN, RS485
- Operating temperature: -40℃～+70℃
- Protection: IP67

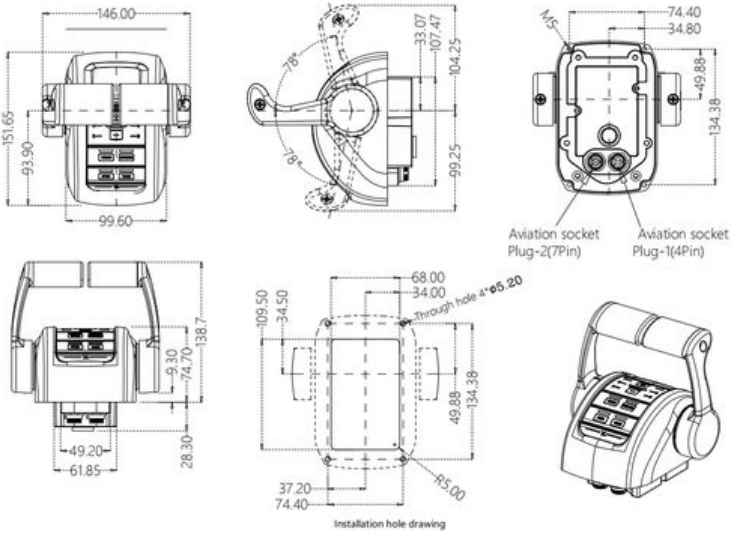

MKF-JS38 Single engine throttle controller



MKF-JS38 single engine throttle controller. Suitable for ship engine throttle control, gear control, etc. There are gear indicator lights and signal indicator lights. It adopts Hall sensor, full temperature range linear compensation, stainless steel shell, waterproof and salt spray design, friction resistance positioning, 3 mechanical gears (DNR).

- Sensor: Double Hall sensor
- Operation angle: 156 degrees
- Center gear: 3 gears (DNR)
- Life span: more than 5 million times
- Power supply: DC5V/DC12V/DC24V
- Signal output: analog voltage 0-5V, CAN, RS485, 0-20MA
- Operating temperature: -40℃～+70℃
- Protection: IP67

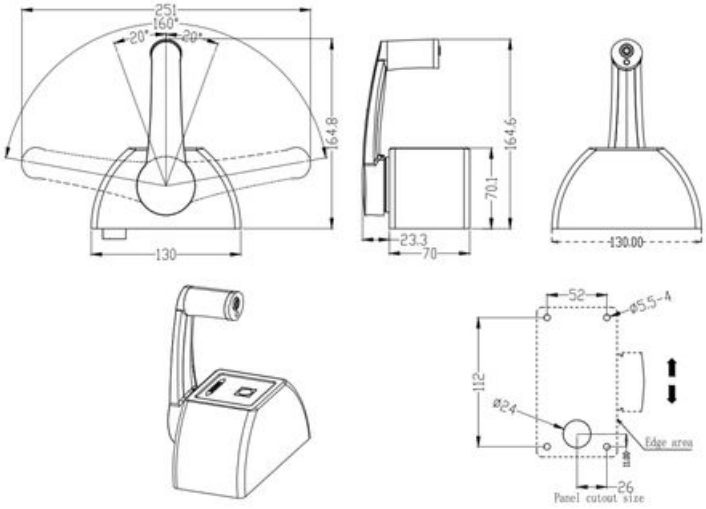

MKF-JS38-V1 Single engine throttle controller



MKF-JS38 single engine throttle controller. Suitable for ship engine throttle control, gear control, etc. There are gear indicator lights and signal indicator lights. It adopts Hall sensor, full temperature range linear compensation, stainless steel shell, waterproof and salt spray design, friction resistance positioning, 3 mechanical gears (DNR).

- Sensor: Double Hall sensor
- Operation angle: 156 degrees
- Center gear: 3 gears (DNR)
- Life span: more than 5 million times
- Power supply: DC5V/DC12V/DC24V
- Signal output: analog voltage 0-5V, CAN, RS485, 0-20MA
- Operating temperature: -40℃～+70℃
- Protection: IP67

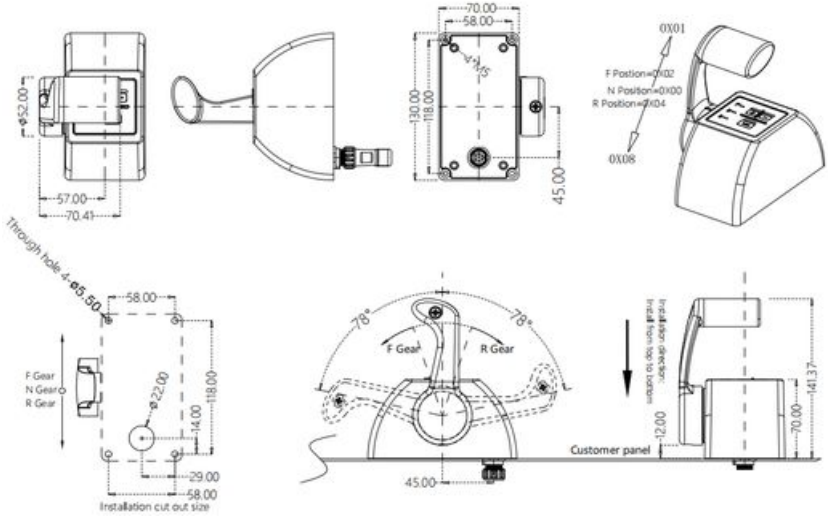

MKF-JS76 Ship full-rotation engine controller





- Full-rotation propeller control, with propeller angle and speed control functions, suitable for large ship control.
- Multiple signal outputs: analog voltage signal 0.5-4.5V; analog current signal 4-20.mA.
- Horizontal angle: 360 degrees continuous/Vertical angle: ±60° or 0-60°
- Customizable features

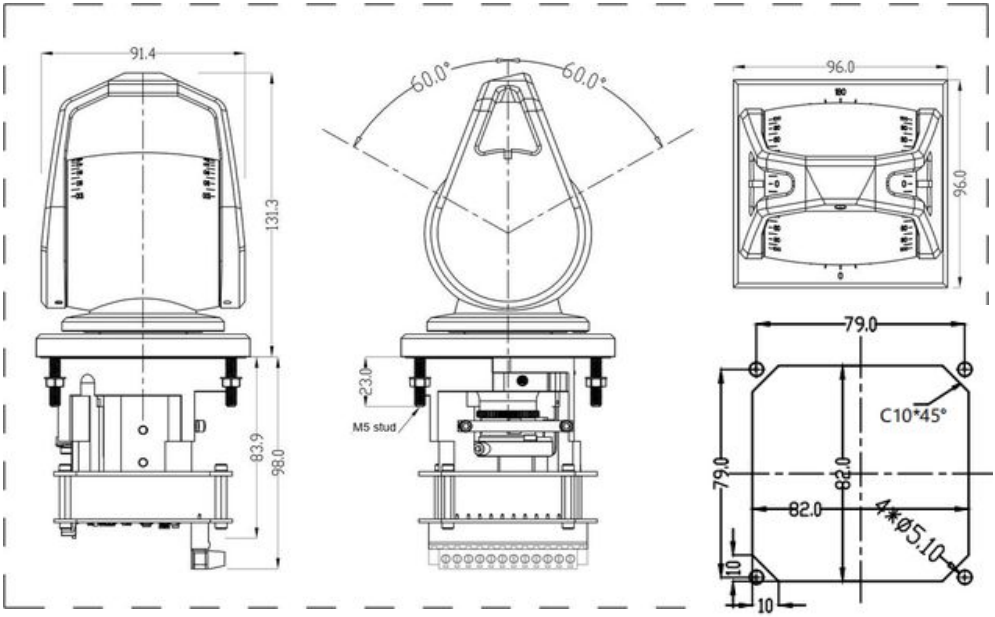

Install panel cutout size

MKF-JS78 Ship full-rotation engine controller



- Full-rotation propeller control, with propeller angle and speed control functions, suitable for large ship control.
- Multiple signal outputs: analog voltage signal 0.5-4.5V; analog current signal 4-20.mA.
- Horizontal angle: 360 degrees continuous;Vertical angle: ±60° or 0-60°
- Backlight indicator strip
- Customizable features
-

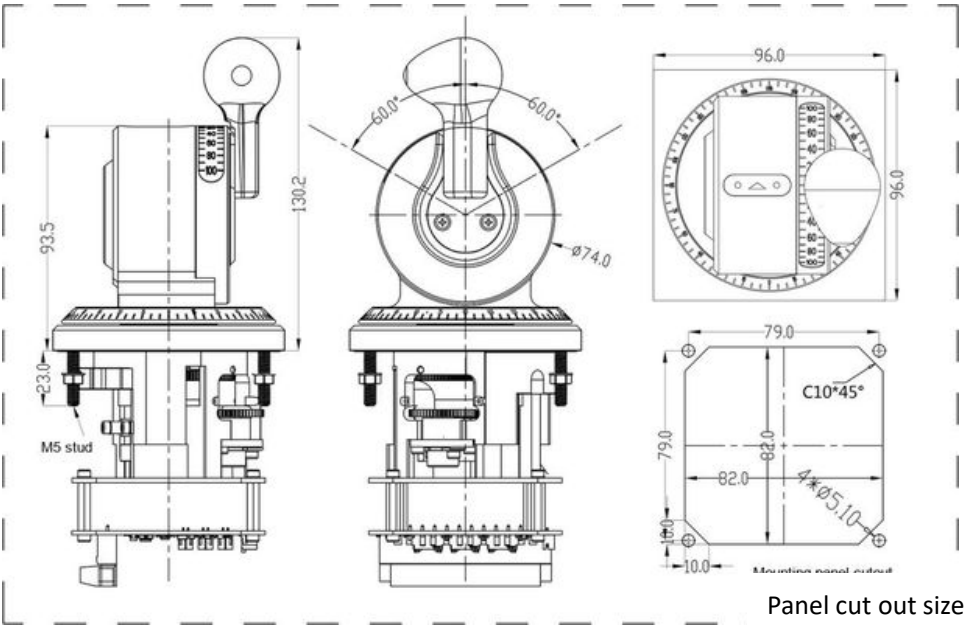

Panel cut out size

MKF-JS17 Rudder

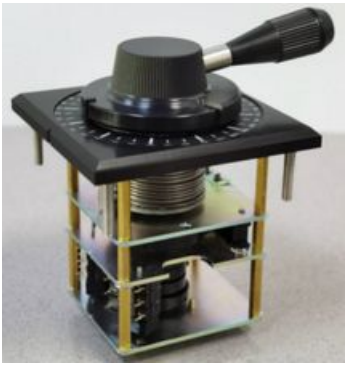



- Signal output: multiple groups of switching signals + voltage signal 0.5-2.5-4.5V
- Positioning: The friction resistance positioning and the spring automatic return to the center position (optional)
- Angle: ±40°, ±60°, ±80°, 100°, 120° or continuous rotation optional
- Hand feeling: gear position feeling (22.5°/gear), smooth damping (medium gear)
- Power supply: DC5V
- Life span: 5 million times
- Operating temperature: -40℃～+70℃

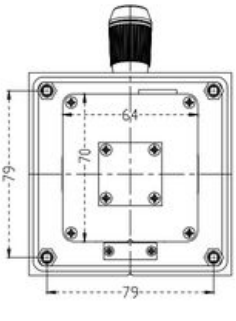

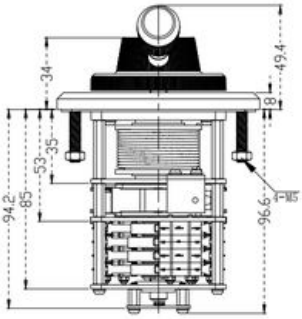

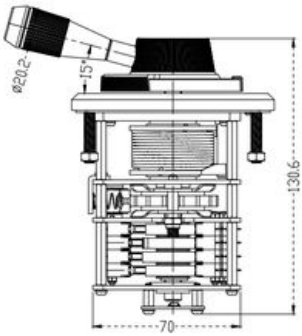

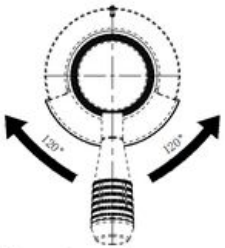

Rotation angle:
±40° 60° 80° 100° 120°

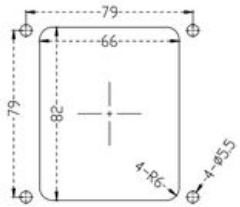

Panel Cutout size

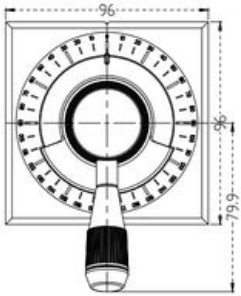

MKF-JS17C Rudder



- Positioning: friction resistance positioning+middle gear feel
- Mechanical angle: ± 120 °
- Power supply: DC5V/24V
- Signal output: multiple sets of switch contacts
- Dual cross signal: 4-20mA/CAN
- Backlight: knob adjustment 0-100%
- Lifespan: greater than 5 million times;
- Operating temperature: -40 ℃~+70 ℃
- Protection: IP66

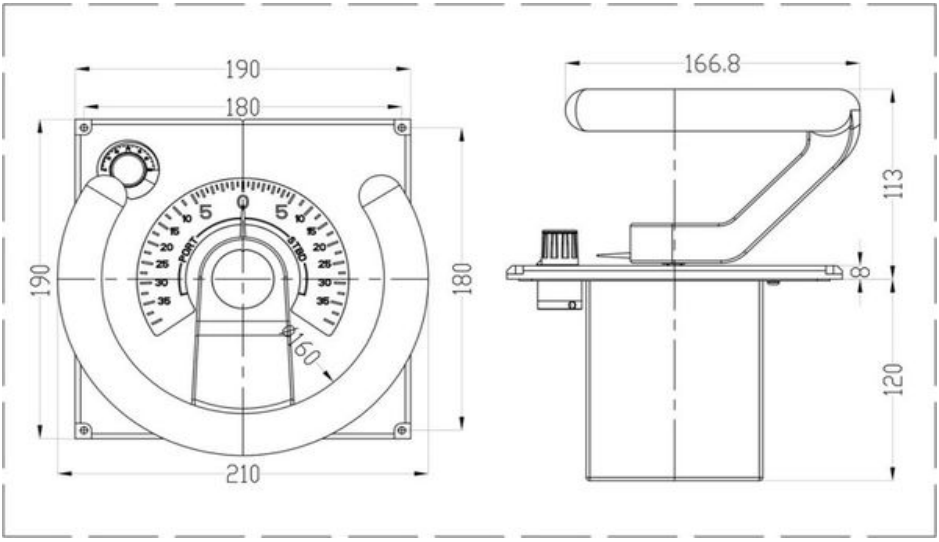

MKF-JS17D Mini handwheel



- Detent: friction
- Angle: +/-40, +/-60, +/-80, 100, 120 or 180 degrees, optional
- Feel: detented (22.5 degrees per step) or smooth damping with a centre notch
- Supply: DC5V / 24V
- Signal: 0.5-2.5-4.5V, 4-12-20mA, CAN, RS485 Modbus

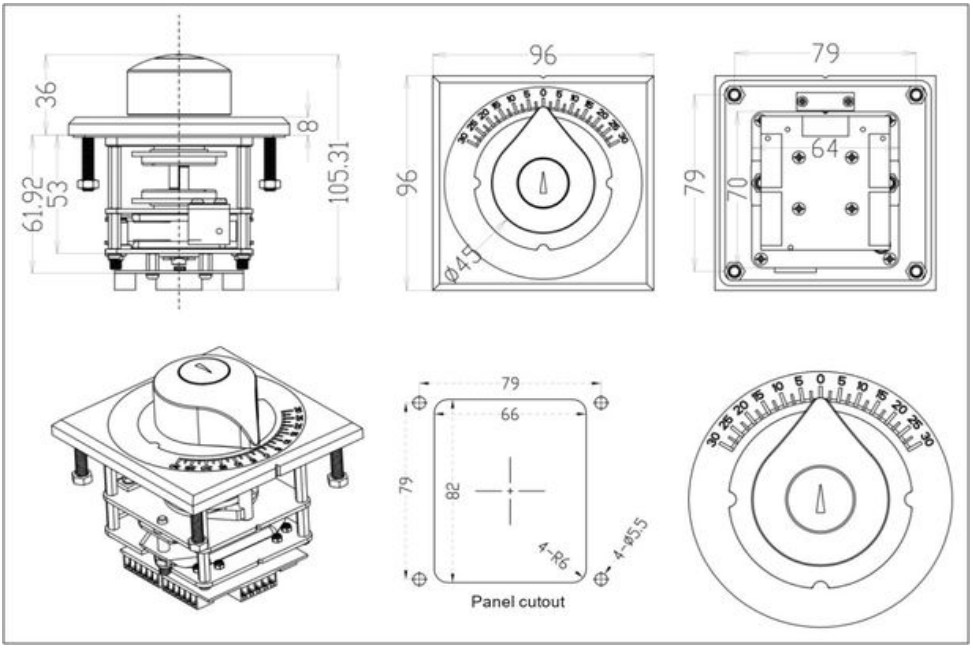

MKF-KNOB4-P Engine throttle knob



- Engine throttle knob for diesel engines. It is used as the secondary control on a ship control panel, normally on the bridge main/secondary changeover panel, where it sets engine speed (throttle).
- Rotation angle: 120 degrees
- Signal output: 2 analogue voltage signals
- Supply: DC5V
- Power consumption: 20mA @ DC5V
- Protection: IP65

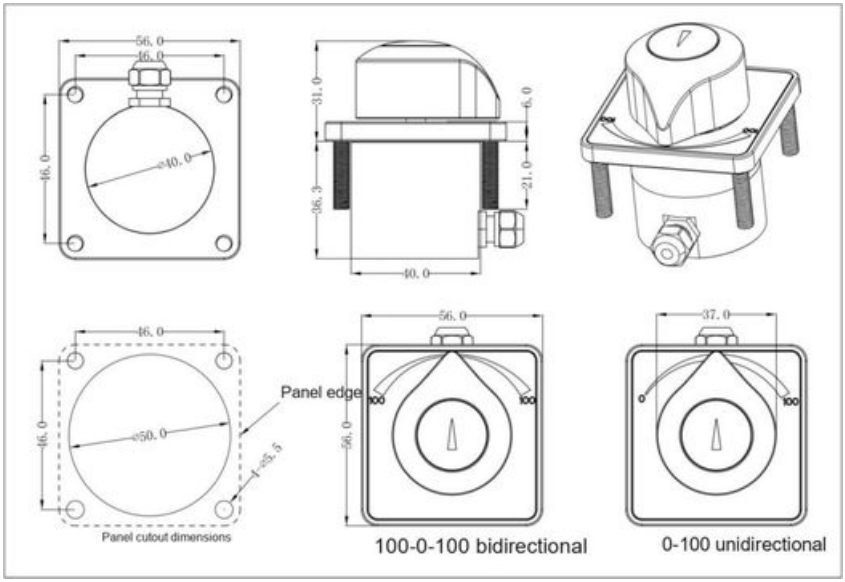

MKF-JS62 Engine throttle controller



This is a dual engine controller/lever. Suitable for throttle control of twin-engine yachts, can control 2 engines, with throttle control, gear control functions. There are 3 mechanical gears DNR, synchronous indication. With Hall sensor, full temperature range linear compensation, 2 engines full electrical isolation technology, bus signal output and engine electronic throttle signal output, waterproof and anti-salt spray treatment, with good operating feel.

- Sensor: Hall sensor
- Operating angle: 150 degrees
- Gear: 3 files (DNR)
- Lifetime: more than 5 million times;
- Signal output: CAN/RS485/diesel engine electronic throttle signal/electric isolation of left and right engine throttle signals
- Power supply: DC24V (10-36V)
- Power consumption: 30mA/@DC24V (no load)
- Operating temperature: -40℃～+70℃
- Protection: IP67

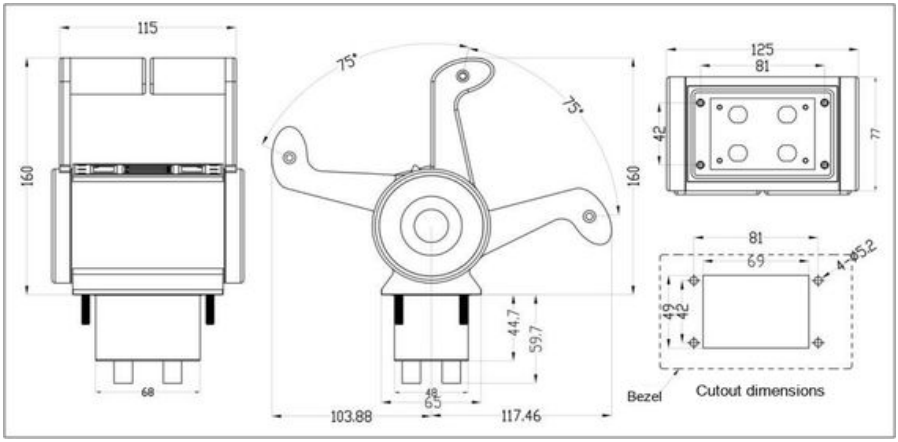

MKF-JS73 Ship 360 degree joystick controller





MKF-JS73 is a single joystick control device that achieves complete and intuitive ship control through a single joystick.
By integrating the two systems together and using advanced control algorithms, the ship's steering system, gear shifting, and throttle (propeller speed) control system can be achieved.

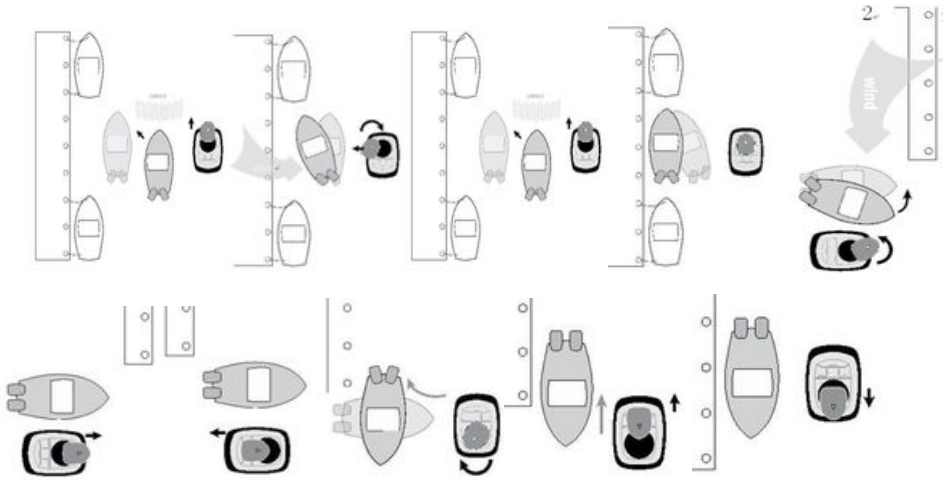

MKF-ESW-01 Electronic power steering





MKF-ESW-01 is an electronic power steering specifically designed for marine environments. The electronic steering seamlessly fits with the dashboard. Suitable for marine or industrial applications.

- Standard steering wheel installation size, can be replaced with steering wheels from different manufacturers' steering wheel.
- Dual redundant, non-contact magnetoresistive rotation sensing input
- Programmable laps and angles
- Adjustable steering resistance with speed variation
- 12VDC or 24VDC power supply automatic detection
- Standard fault-tolerant CAN bus output
- Matching with hydraulic steering pumps can minimize power consumption.

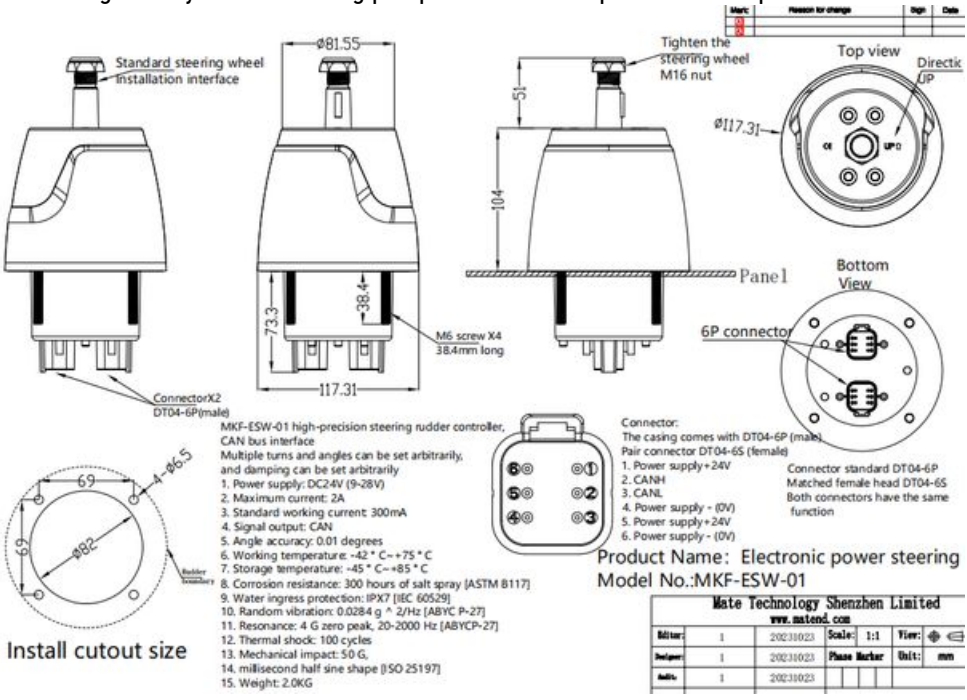

MKF-ESW-02 Electronic power steering



- Designed specifically for autonomous navigation.
- Integrated with a brushless servo motor, electromagnetic damping mechanism, high-precision angle sensor, and torque sensor.
- Standard steering wheel mounting dimensions allow for interchangeable steering wheels from different manufacturers.
- Programmable turns and angles.
- Adjustable steering resistance with speed.
- Automatic 12VDC or 24VDC power supply detection.
- Dual CAN bus outputs.

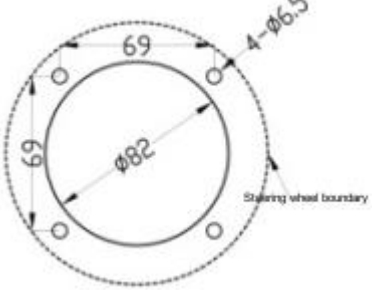

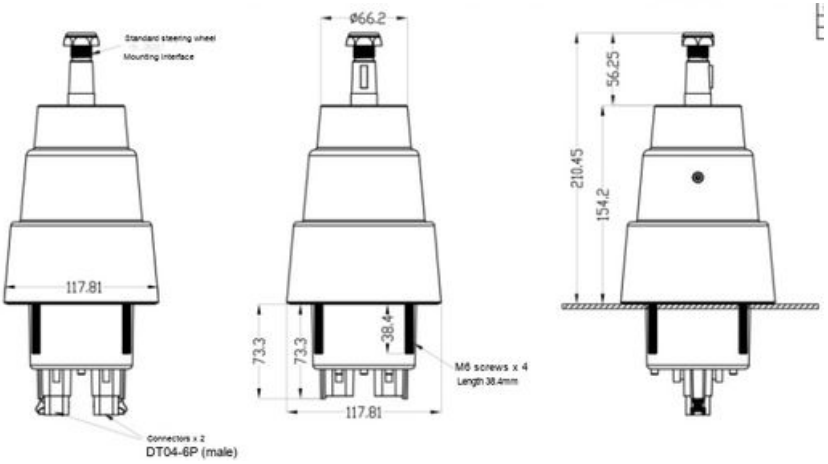

MKF-SA-M2 Shift actuator M2

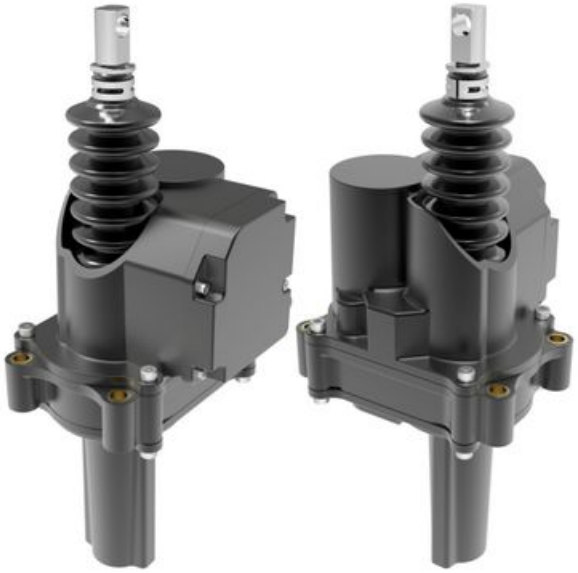

- High precision position control
- Capable of achieving gear mechanical control or mechanical throttle
- Power supply: DC24V
- Total stroke: 60mm
- Communication interface: CAN, customizable protocol
- Protection: IP66

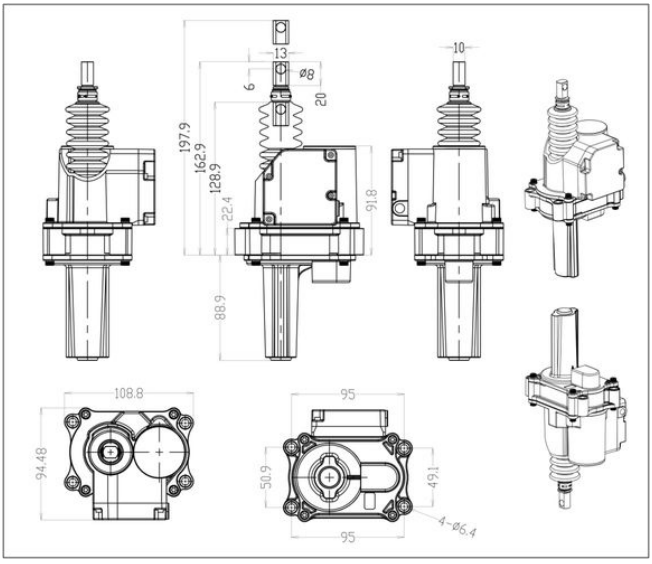

MKF-SA-M5 Steering servo electric cylinder

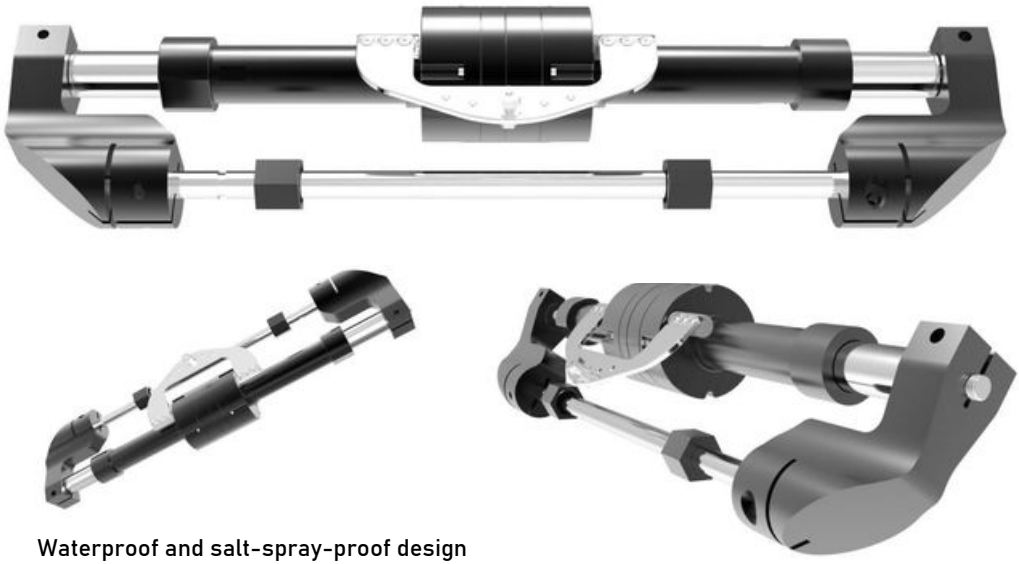

- Waterproof and salt-spray-proof design
- Ball screw mechanism
- Built-in brushless servo motor
- Fast speed and high precision
- Total length: 582mm
- Total stroke: 203mm
- Thrust: 150kg
- Speed: 100mm in 2 seconds (maximum)
- Power supply: 24V DC
- Communication interface: CAN, customizable protocols

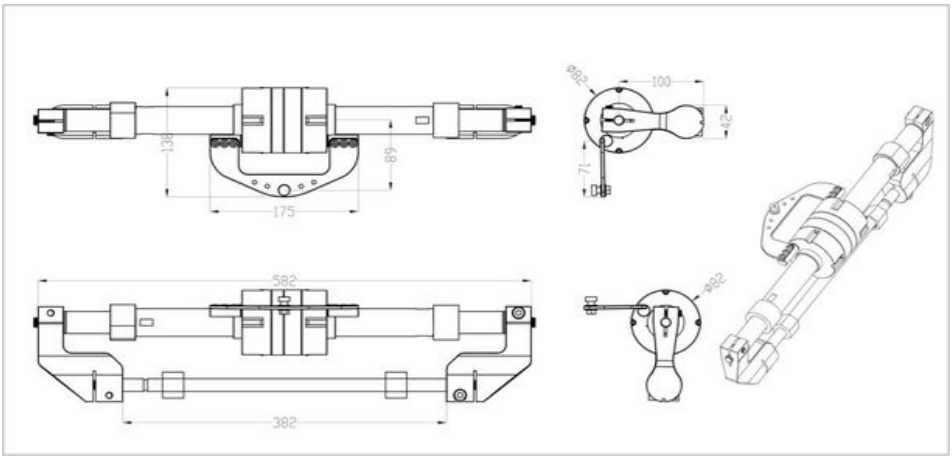

MKF-MJS-56

6-axis robotic arm controller



- Simulate an arm with 6 free degrees. It includes six free degrees: shoulder swing, shoulder pitch, elbow pitch, wrist pitch, wrist swing, and wrist rotation; There are three buttons on the base used to control the opening and closing of the gripper, as well as the master-slave tracking enable function.
- The operating force of each joint can be adjusted separately, using Hall sensors with 12 bit resolution. Internally integrated with CAN interface and RS232 interface, powered by DC 9-36V.

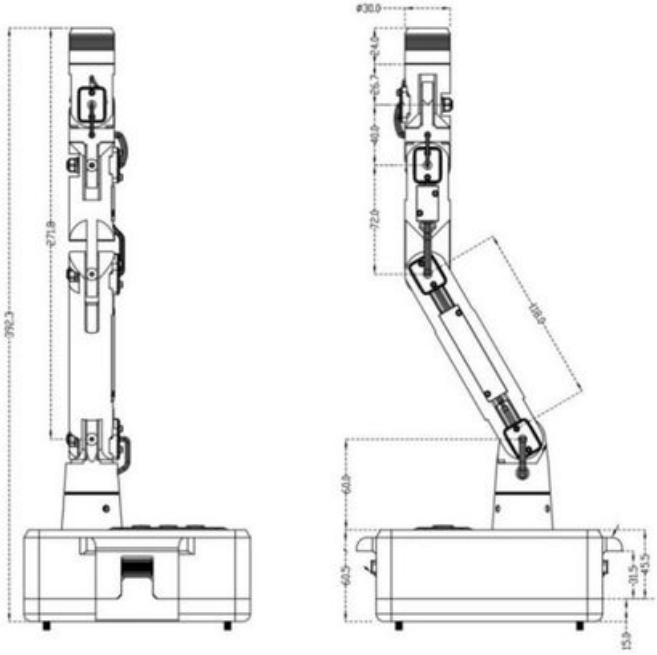

MKF-JS01 Desktop Joystick



- Keys: 8 keys, lifespan of 5 million times
- Indicators: 3 LED indicators
- Interface mode: USB2.0HID, Plug and play
- Other interfaces: RJ45 (RS232+RS485) (Only one interface method can be selected)
- Weight: 0.6kg
- Size: (W)120X(L)157X(H)97
- USB interface products:
- MKF-JS01-USB standard USB joystick, Plug and play
- MKF-JS01-M standard USB, joystick + mouse, Plug and play
- MKF-JS01-L analog voltage interface, 0-5V signal output.

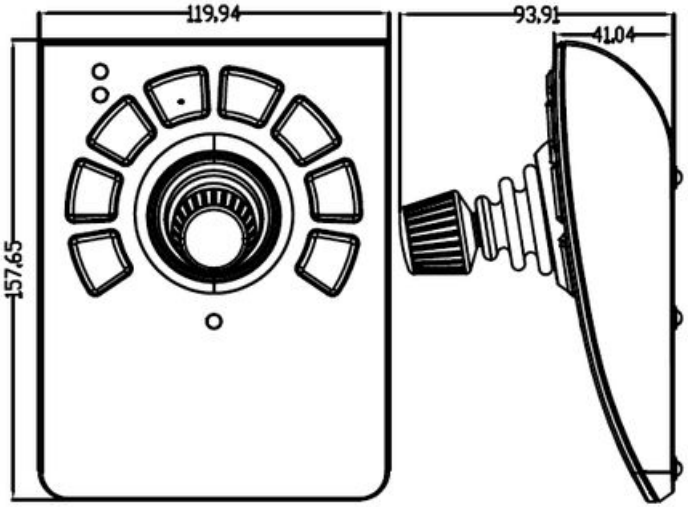

MKF-JS02 Desktop Joystick



- Three-axis Hall joystick
- Buttons: 15 buttons, emergency button, encoder knob
- Display: 4-digit LED
- Power supply: DC5V or DC12V optional
- Weight: 0.6kg
- Size: (W)220X(L)107X(H)55
- Communication interface: CAN, RS232, RS485, USB
- Accessories: 3M long cable

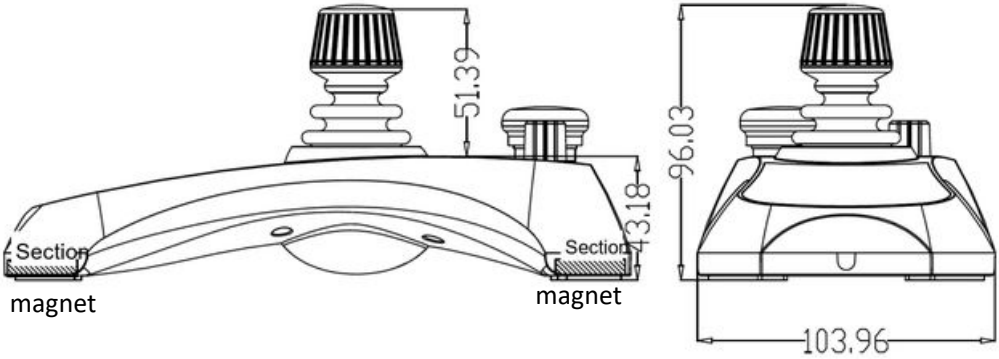

MKF-JS61 Desktop Joystick







- Ergonomic design
- It has a strong magnetic adsorption function, which can be directly attached to the surface of the device to prevent it from falling and breaking.
- Integrated with a 3-axis Hall type joystick
- With 12 backlighting buttons, layout can be customized
- With one Emergency stop switch
- With one LED display
- Signal output interface: RS232 / CAN
- Power supply: 10-36V
- Factory default communication mode: CAN/250K/30mS timing sending

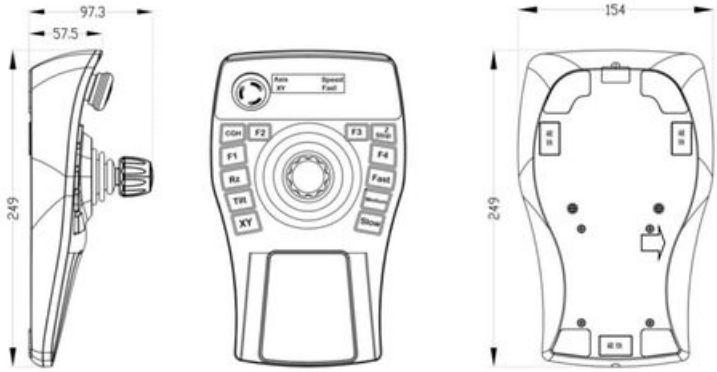



MKF-RC01

Mate wireless Joystick station for remote control





The joysticks station is suitable for the hoisting and lifting equipment through auxiliary devices and contractors. Special wireless and handiness version designed to be ideal for unsupervised or dangerous / hostile hard working condition. It can be mounted in the compact case, which is also feasible with customized design like optional buttons and variety joysticks.

- Frequency: 470.00Mhz
- 1 x Hall effect joystick, 2 x momentary push buttons, 1 x emergency button, 2 x toggle switch
- Remote control distance: 100M
- Battery: 3.7V, 5000mA
- Frequency: 470Mhz
- Automatic shutdown after 15 minutes of inactivity
- The battery can be connected for about 30 hours
- Power-on method: turn on the emergency stop switch → long press the START button for 8 seconds (bottom side) → release when the sound is heard, then short press
- START key 1 click→automatically start

MKF-RF02

Wireless remote control RF2 for Crane





- Frequency: 433Mhz band
- Two-way real-time communication
- Remote control distance: 100m
- Battery: 3.7V/2500mA lithium battery
- mobile phone charger charging
- 0.91-inch OLED display, 2 indicator lights on the panel
- 2 thumb joysticks
- With safety lock and emergency stop switch
- Continuous working time: 7 days
- Receiver CAN+RS485 communication

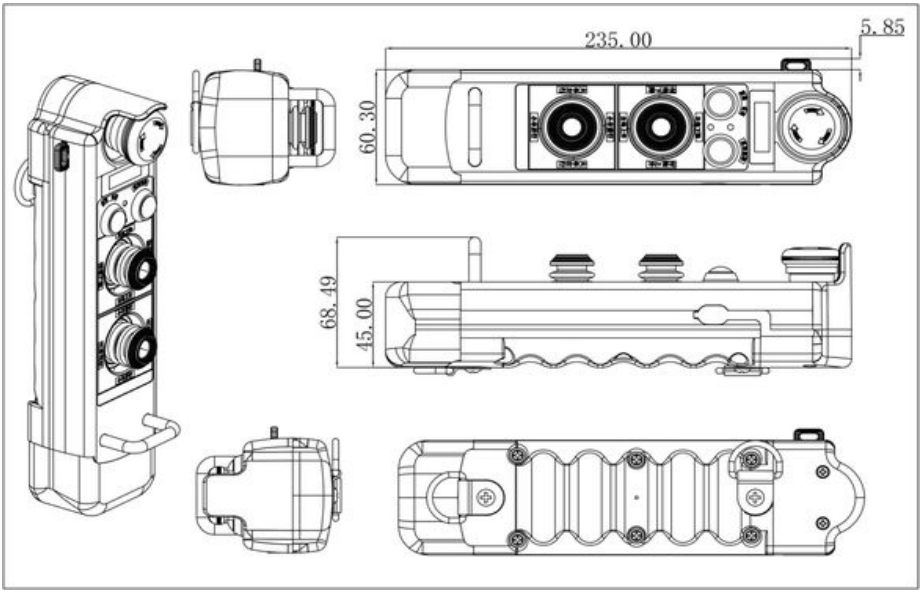

MKF-AT01



- MKF-AT01 Electric armrest box series products have multiple layouts and can be customized; Equipped with 1 TYPE-A phone charging interface
- With dual color backlight button.
- Power supply: DC24V power supply
- Communication interface: CAN
- Working temperature: -40-+85 ℃
- Storage temperature: -50-+85 ℃







Tractor power switch
MKF-S01

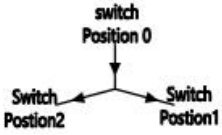

Press down first,Then move forward or backward
No1. Three positions: 012Postion lock
No2. Two positions: 01or02 position lock

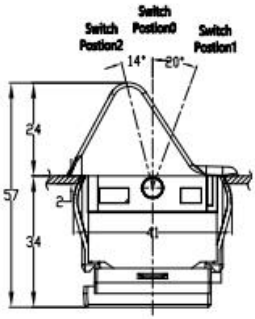





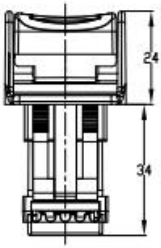

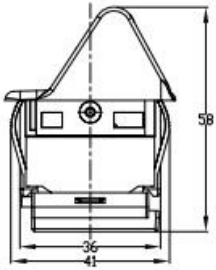

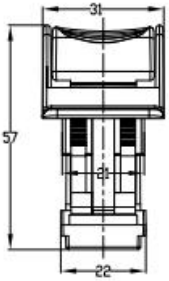



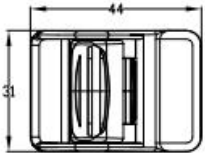

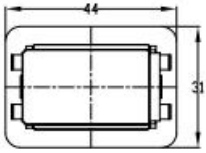

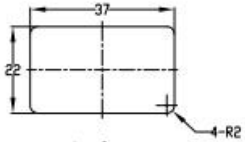

Cutout size from up to bottom

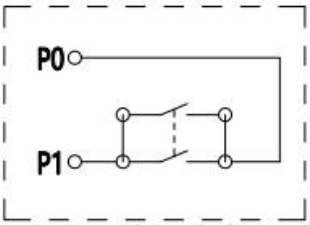

Schematic diagram for 2 positions

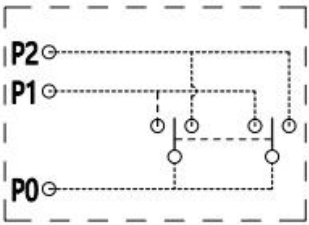

Schematic diagram for 3 positions

Model No.: MKF-S01
X=2(2 positions)/3(3Postions)

Tractor power switch
MKF-S02



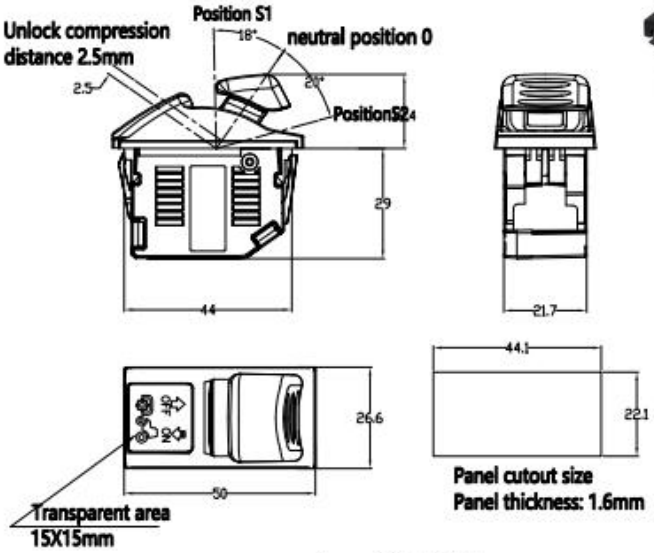





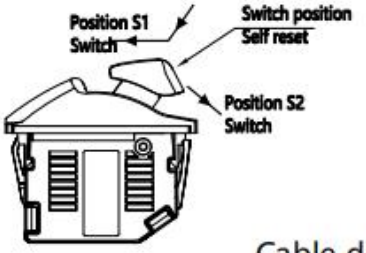

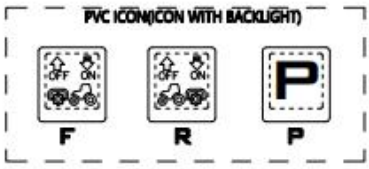

Cable definition:
P1 +5V(Red)
P5 LED GREEN(Green)
P6 LED White(White)
P7 ON(Yellow)
P8 OFF(Grey)
P9 COM(Black)

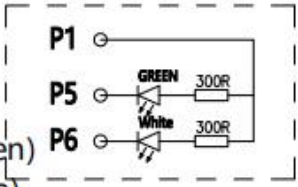

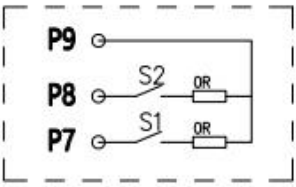

Model No: MKF-S02
X=PVC ICON(F/R/P)
Y=Connector

MKF-DIS35 3.5-inch instrument display







600 MHz MCU with an integrated 2.5D graphics acceleration engine rotates images through any angle, so dynamic effects such as the needle movement stay smooth and precise. Software is upgraded from a USB drive, which keeps maintenance and iteration simple and efficient. UI customisation is provided free of charge to match your brand and individual requirements.

Display: 3.5-inch TFT, resolution 640 x 480

Keys: 5 assignable keys

Interface: M12 circular connector, NMEA 2000 standard, isolated CAN

Supply: DC24V (12-36V)

Power consumption: 80mA @ DC24V

Protection: IP67

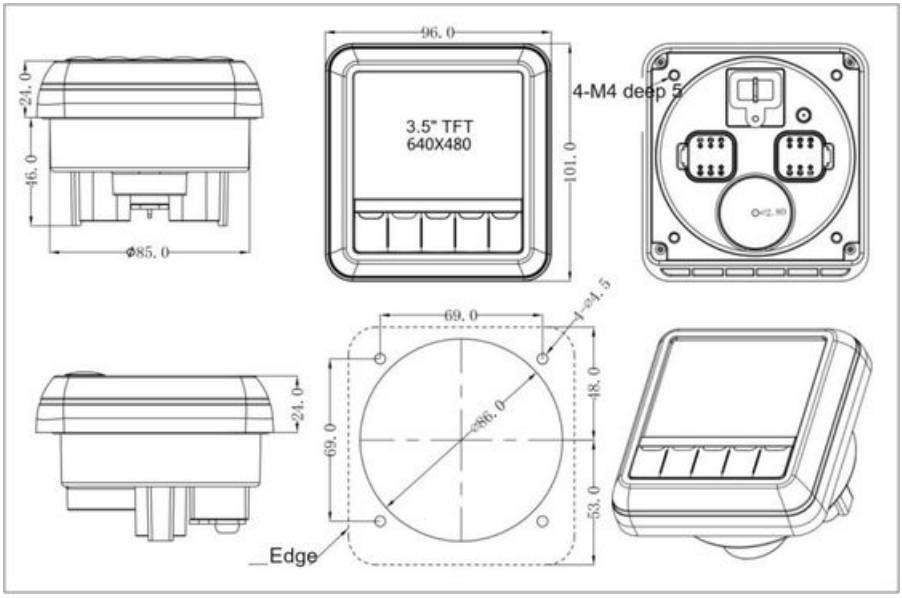

MKF-DIS501 5-inch instrument display





The MCU runs at 600 MHz with a built-in 2.5D graphics accelerator. Graphics can be rotated and the needle movement is smooth. UI customisation is free of charge; software is upgraded from a USB drive.

Display: 5-inch TFT, resolution 800 x 480

Keys: 5 backlit keys, key legends customisable; the legends stay readable at night and the backlight brightness is adjustable

Supply: DC24V (12-36V)

Power consumption: 80mA @ DC24V

Interface: M12 circular connector, NMEA 2000 standard, isolated CAN

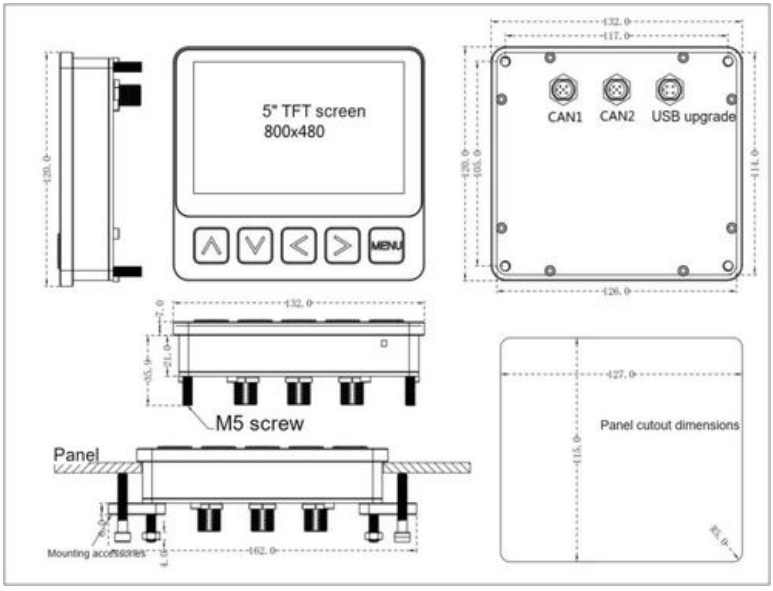

MKF-DIS701 7-inch instrument display





The MCU runs at 600 MHz with a built-in 2.5D graphics accelerator. Graphics can be rotated and the needle movement is smooth. UI customisation is free of charge; software is upgraded from a USB drive.

Display: 7-inch TFT, resolution 1024 x 600

Keys: 8 backlit keys, icons customisable; the icons stay readable at night and the backlight brightness is adjustable

Supply: DC24V (12-36V)

Power consumption: 80mA @ DC24V

Interface: M12 circular connector, NMEA 2000 standard, isolated CAN

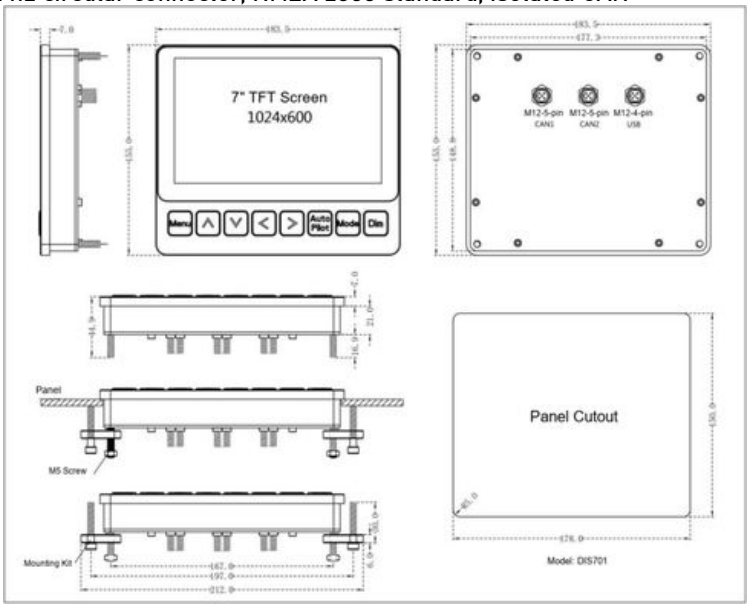

CAN bus relay control box CANBOX1



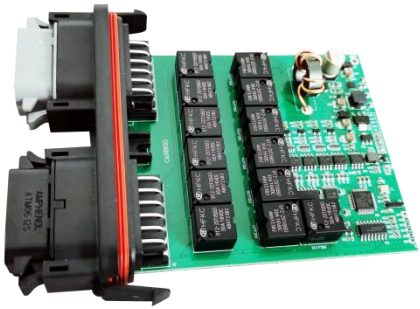

Function: Convert the switch signal from the CAN bus into a relay switch;

- The proportional amount from the CAN bus is converted into a 4-20mA signal.
- 13 relays
- Relay contact current: 10A
- 4 channels of 4-20MA proportional signal output
- Bus current detection, voltage detection
- CAN communication
- Wide supply voltage 10-36V
- Product size:146X206X36.5 MM
- IP67 protection

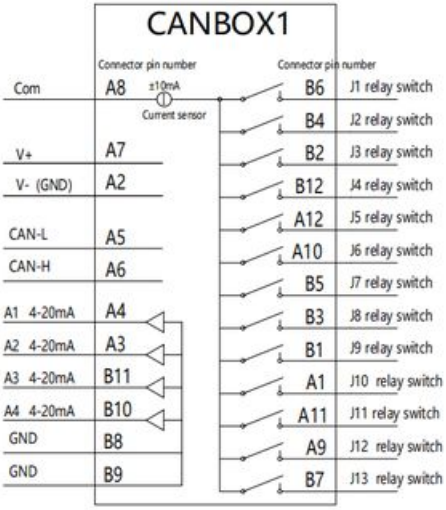

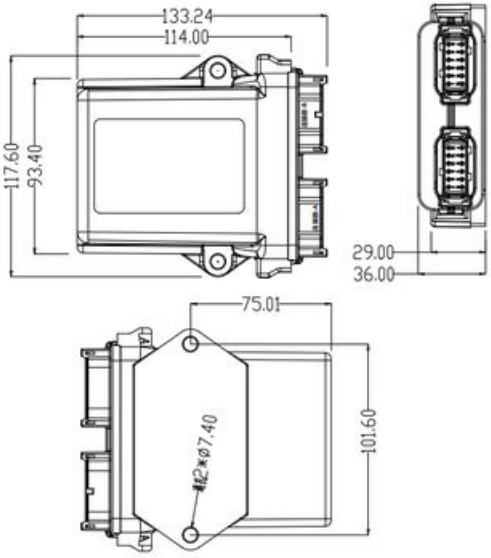

CAN bus relay control box CANBOX2





Function: Convert the switch signal from the CAN bus into a relay switch;

- The proportional amount from the CAN bus is converted into a 4-20mA signal.
- 30 relays
- Relay contact current: 10A
- 4 channels of 4-20MA proportional signal output
- Bus current detection, voltage detection
- CAN communication
- Wide supply voltage 10-36V
- Product size:146X206X36.5 MM
- IP67 protection

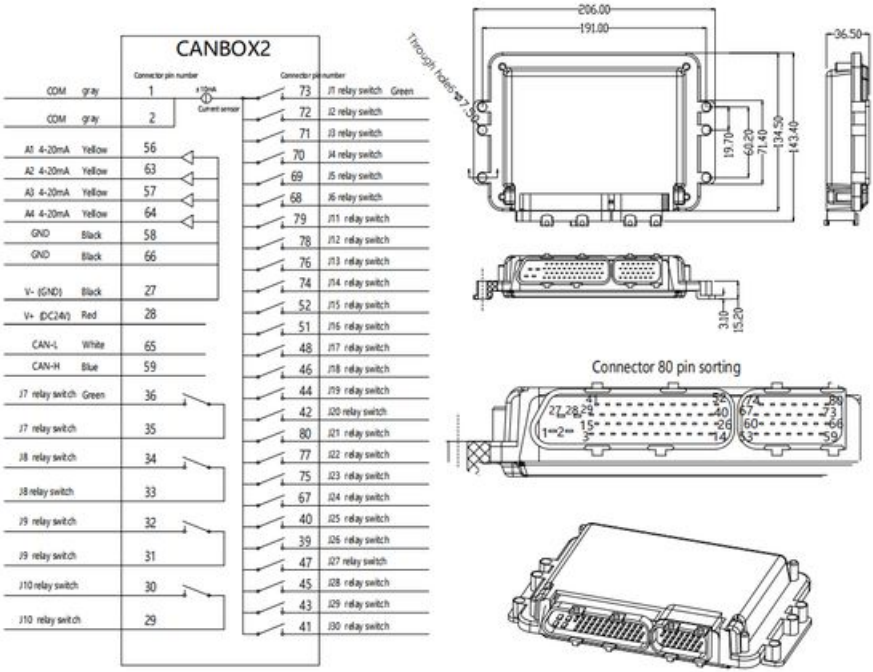

MKF-3-PLC

Mate Wiring diagram of Joystick servo motor control panel



- Can control steeping motor,servo motor
- 3 axis independent control, can control 3 motors at the same time, each axis independent control
- Control the nonlinear speed curve, with accurate control and high speed control performance
- Independent S-shaped acceleration and deceleration control for each axis
- Software inertia configuration with good control
- Each axis independent limit switch (normal open, closed limit), support electronic switch
- Support master computer control(customization,software support required)
- Differential signal output, pulse+ direction

Joystick	3 axes, Hall effect
Control the number of motors	3 motors , simultaneous control, each axis is independent
Motors	Servo motor or stepping motor
Output frequency	0-10KHZ/axis
Output interface	Differential signal output
Control mode	Location mode(Pulse+direction, differential signal)
Power supply	DC8V～DC28V /400MA
Limit switch	Each axis 2pcs (normal open)

Trigger switch RS-T1





- There are 2 gears and consists of 2 micro switches. This product can replace similar foreign products, adopting fully sealed waterproof switches, advanced mechanical structure, and super-position feel.
- Gear position: 2nd gear (spring automatic return)
- Safety lock: with safety lock function (optional function)
- Travel: first gear angle: 13 degrees (stroke 6mm), second gear angle: 7 degrees (stroke 3mm)
- Working force: 10N for the first gear, 25N for the second gear;
- Contact current: 30V/1A;
- Life: more than 1 million times
- Working temperature: -40℃~+75℃
- Test: Vibration 10-500hz/10g, acceleration 50g
- Protection: electrical ICE IP67

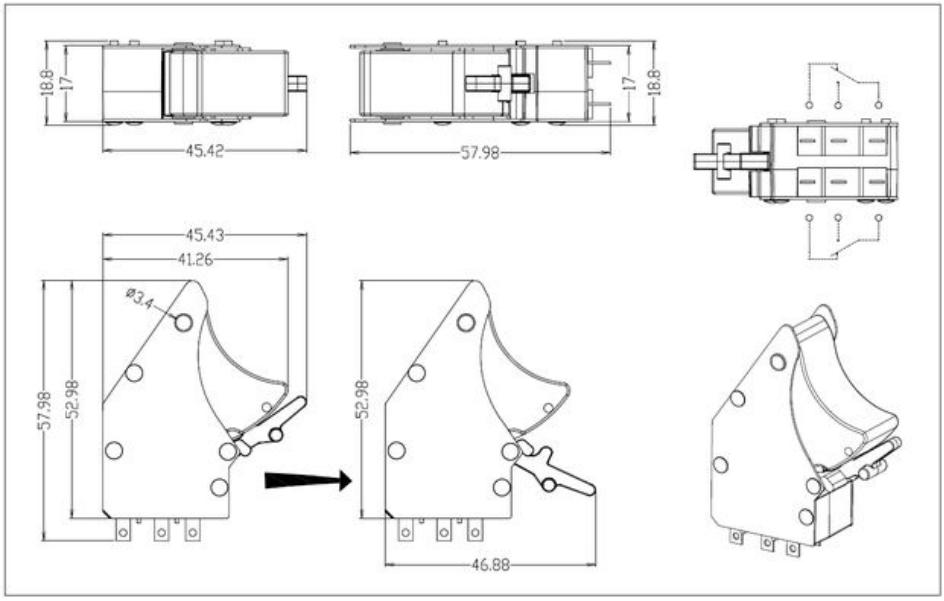

Hall linear button PB-12



PB-12 series Hall linear buttons. The spring automatically returns; linear voltage signal output, 0V when the button is released, 4.5V when it is pressed to the end, linear signal output. Aluminum alloy housing material, imported from Germany Hall sensor, full temperature range linear compensation, multi-point linearity correction, moving parts and sensor non-contact, long life.

- Returning method: spring automatic return
- Mechanical stroke: 8mm
- Power supply: DC5-7V
- Working current: 12MA
- Signal output: analog voltage 0～4.5V (other voltage ranges can be customized)
- Life span: more than 5 million times
- Operating temperature: -40℃～+70℃
- Protection level: IP54 protection

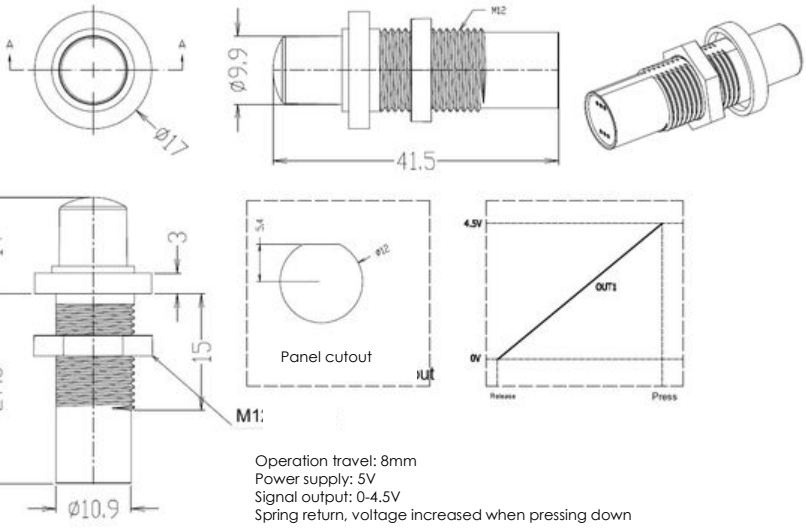

Operation travel: 8mm
Power supply: 5V
Signal output: 0-4.5V
Spring return, voltage increased when pressing down

Buttons and accessories

Cutout diameter: 12MM;

IP rate: IP67;

Lifespan: 1 million

contact capacity: 2A/DC24V

Color: Red, green, yellow, blue, black





Push-button cover (Cutout diameter: 12mm)

Material: Stainless steel 316









MKF-ES-03 Tractor emergency stop switch



- Emergency stop switch dedicated to tractors, with an anti-misoperation design: press first, then pull up to release.
- Maximum operating voltage: 48V
- Maximum operating current: 300mA
- Life: more than 500,000 cycles
- Protection: IP67

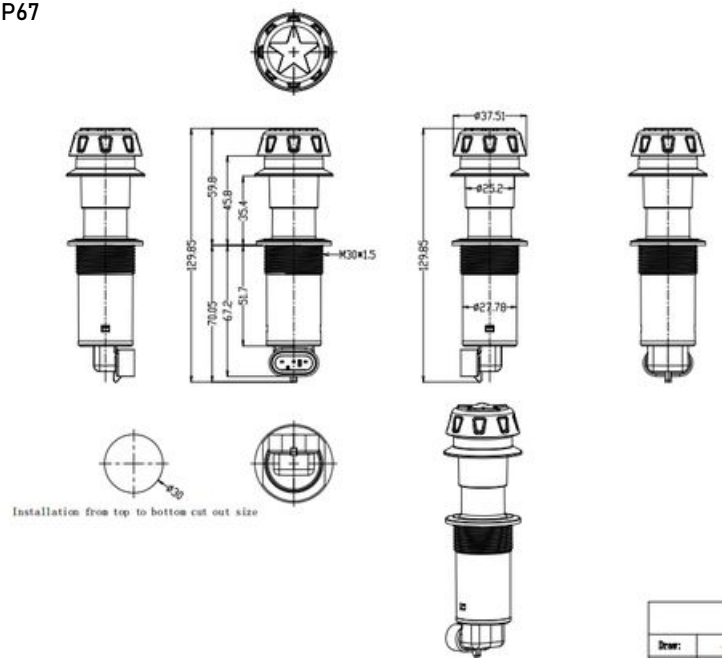

MKF-S08 Waterproof push button



- Technical data
- Material: nylon
- Button travel: 5mm
- Operating life: 1,000,000 cycles @ 5mA
- Maximum operating voltage: 48V
- Maximum operating current: 300mA
- Standard operating current: 100mA
- Protection: IP67

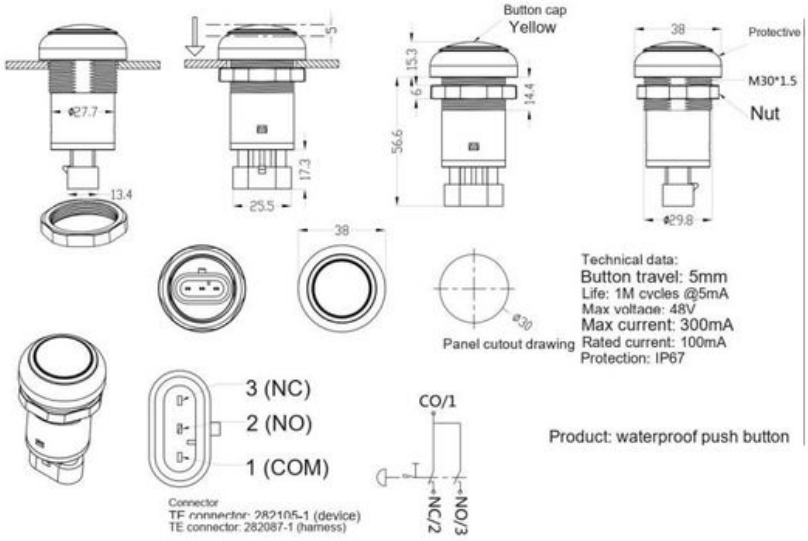

MKF-B12S Buttons and accessories



- With backlight, a variety of translucent icons
- Life span: more than 3 million times
- Mechanical stroke: 3mm
- Contact capacity: Max300mA@36V
- LED power supply: 3V/10mA
- Protection: IP67
- Temperature: -40-+85 degrees
- Mounting hole M12 with nut

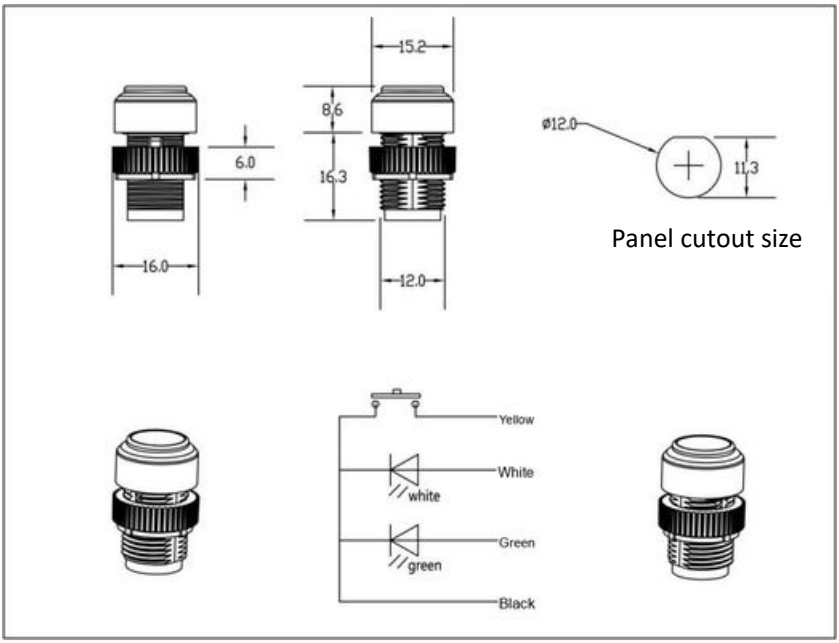

MKF-B12F Proportional button





- Hall sensor: 0.5V at rest; the voltage rises as the button is pressed and reaches 4.5V when fully pressed
- Technical data; a choice of icons is available
- Action: spring return
- Mechanical travel: 4mm
- Signal output: analogue voltage 0.5-4.5V
- Operating voltage: 5 +/-0.5V
- Operating current: 5mA @ DC5V, no load
- Operating life: 1,000,000 cycles
- Protection: IP54 mechanical, IP67 electronics
- Lead length: 20cm

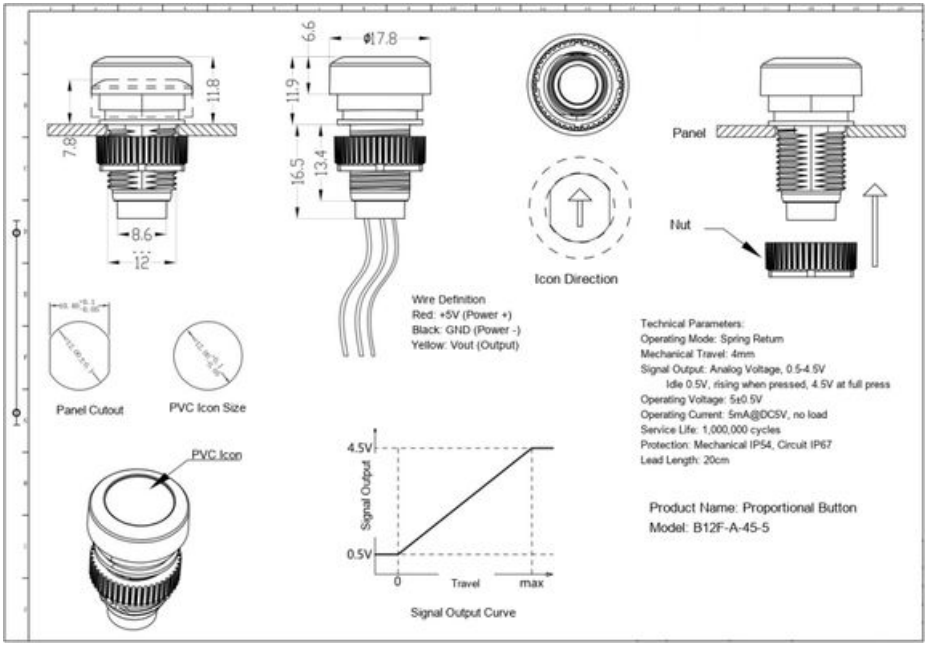

MKF-B12G Backlit Hall effect push button



- Contactless Hall principle for long life and high reliability. Two versions are available in this series.
- B12G-A: 14.1mm cap diameter, no backlight, black cap
- B12G-B: 17mm cap diameter, PVC icon, white backlight so the icon is visible at night
- Specifications
- Supply: DC2.8-32V
- Power consumption: 2mA @ DC5V, no load
- Signal output: open collector, 20mA maximum, with overcurrent protection
- LED backlight: white, 10mA @ DC5V

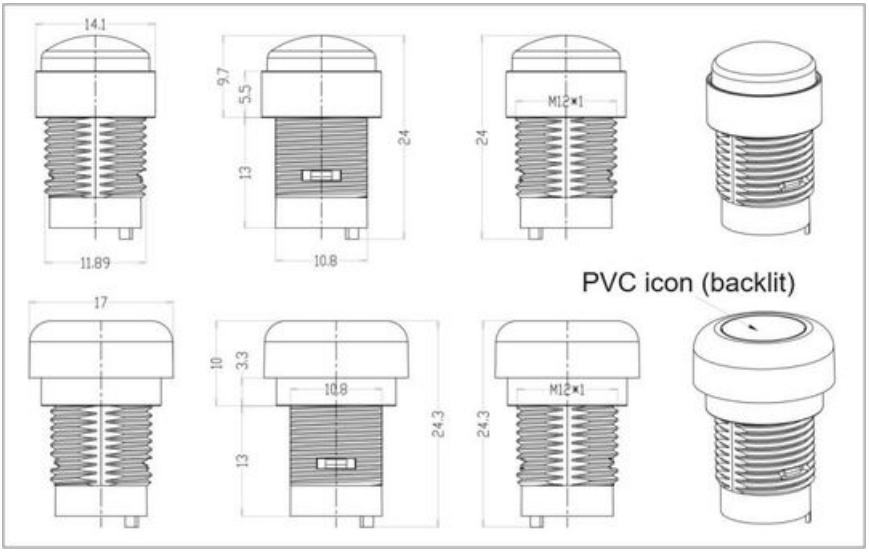

MKF-M10-2 Auto-steering wheel motor(angle sensor+servo motor)

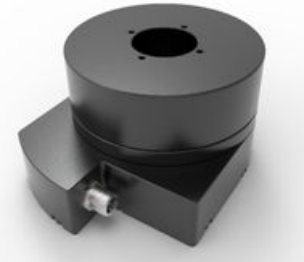

- Designed for automatic navigation, with a brushless servo motor and a high-precision angle sensor integrated inside the housing.
- Standard steering-wheel mounting dimensions, so wheels from different manufacturers can be fitted.
- Programmable number of turns and angle.
- Supply: 24VDC
- Signal output: isolated CAN
- Rated current: 5A
- No-load current: 200mA
- Torque: 2.2N.m
- A torque sensor and a human presence sensor can be added.
- Further customised auto-steering solutions are available on request.
- Above: brushless servo motor + 16-bit absolute angle sensor

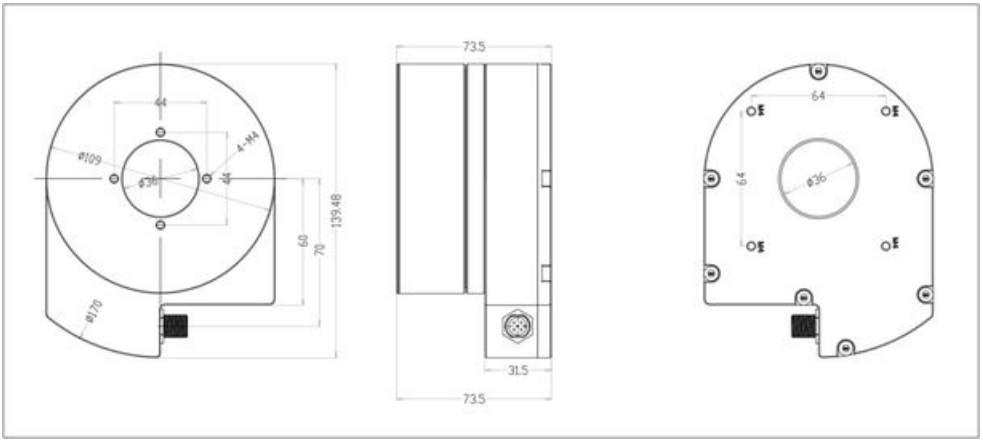

MKF-01-KNB

Suitable for military industry, aviation, simulator



- Sensor: Hall sensor
- Positioning: friction resistance positioning (standard configuration) 0-320°
- Spring automatic return (optional) ±36°
- Angle: 320°standard, (360°continuous optional)
- Hand feeling: scale hand feeling, smooth damping, adjustable strength
- Power supply: DC5V
- Signal output: analog voltage 0-5V
- Life span: 5 million times;
- Material: Aluminum alloy
- Operating temperature: -40℃～+70℃

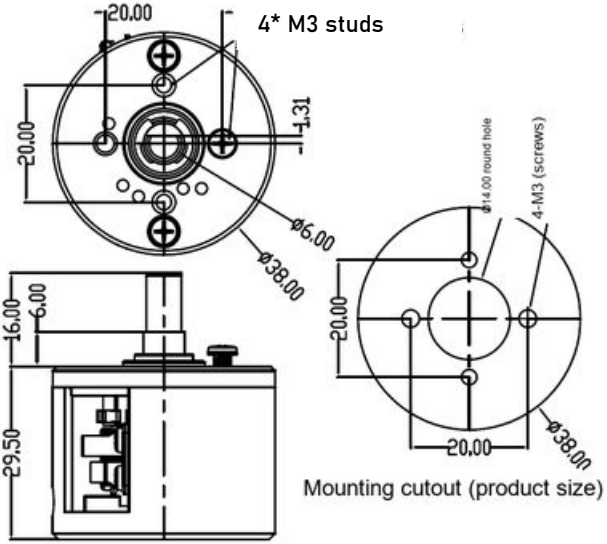

MKF-02-KNB

Suitable for military industry, aviation, simulator



- Material: aluminum alloy + stainless steel;
- Structure: adjustable friction hold /Smooth/medium feel optional
- Rotation angle: 300°
- Sensor: Hall sensor
- Input voltage: DC5±0.5V
- Working current: 10mA@5V
- Output signal: 0.5--4.5V linear proportional signal
- Mechanical life: more than 10 million times
- Protection class: IP67
- Working temperature: -40 ~ +70℃
- Storage temperature: -50 ~ +80℃

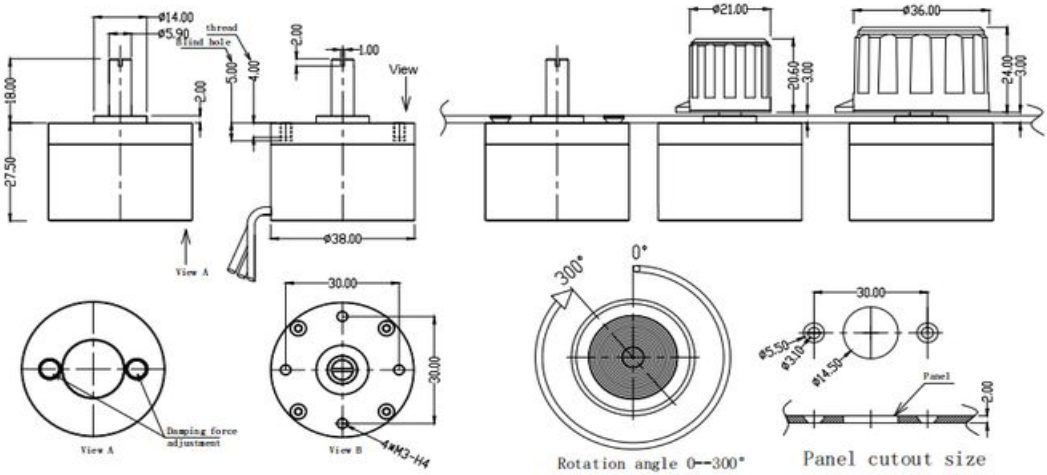

MKF-03-25-KNB(diameter:25mm)

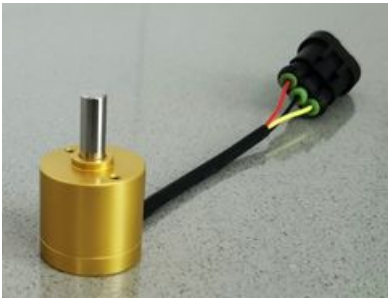

- Material: aluminum alloy + stainless steel;
- Structure: friction brake mechanism
- Rotation angle: 300° ; customizable angle
- Sensor: Hall sensor
- Input voltage: DC5±0.5V
- Working current: 8mA@5V
- Output signal: 0.5-4.5V linear proportional signal;
- Mechanical life: more than 10 million times
- Protection level: IP67
- Working temperature: -40~~+70℃
- Storage temperature: -50~~+80℃
- External lead: 19AWG/wire length 100mm

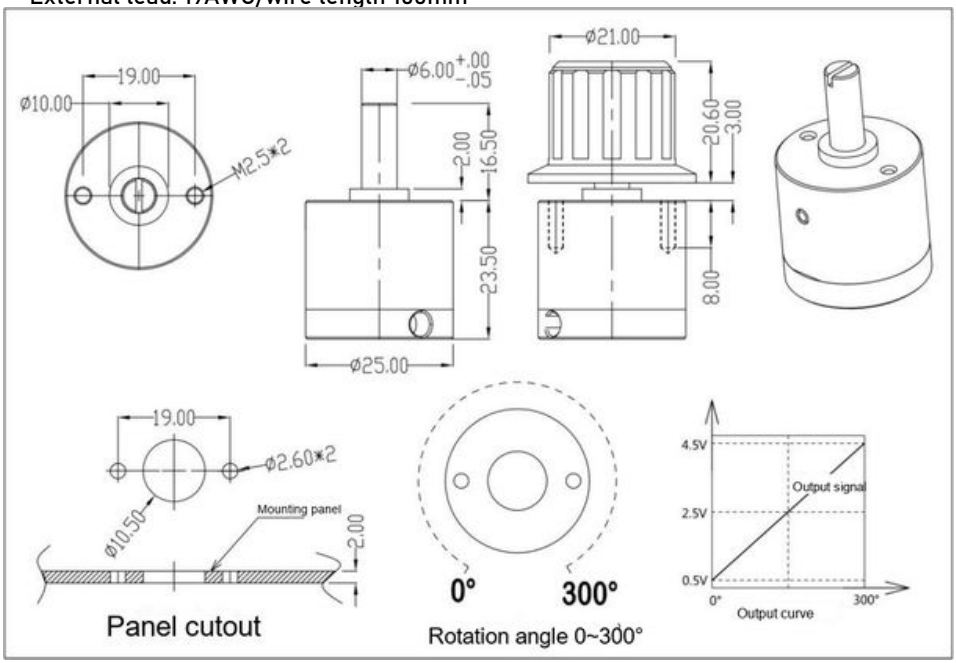

MKF-03-KNB Hall knob

CAN BUS absolute angle sensor





MKF-03-KNB is an absolute angle sensor specifically designed for the marine environment. CAN BUS signal output. Stainless steel 316 material, fully waterproof design, suitable for precise

- Stainless steel 316 material, waterproof design
- Protection: IP67
- Flammability level: V0 [UL-94] • Connector tension
- Resistance: 60 lbf [ISO 10133]
- Using non-contact magneto resistive sensors
- Measurement method: absolute value rotation angle measurement
- Measurement range: 360 degree continuous rotation
- Measurement accuracy: 0.01 degrees
- Countable laps: -128 laps -+127 laps (power off laps clear 0)

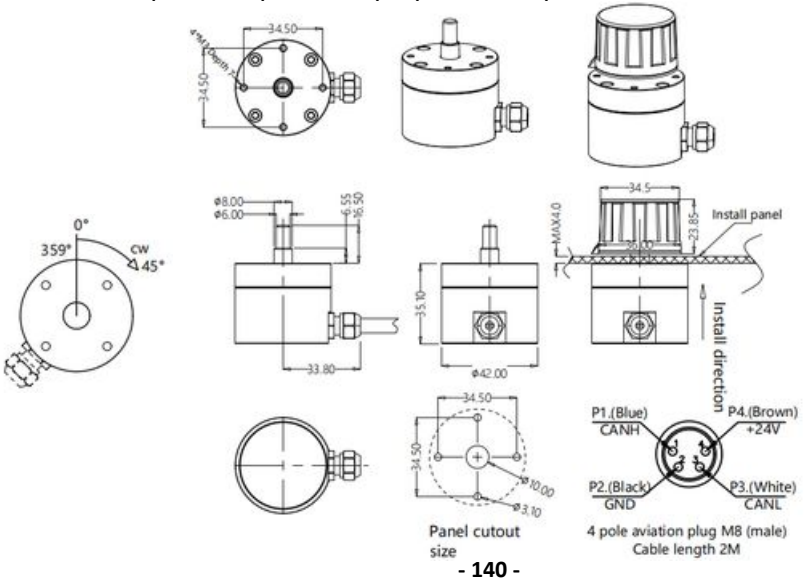

Panel cutout size

4 pole aviation plug M8 (male)
Cable length 2M

MKF-Knob20 Hall effect encoder (20mm outer diameter)



- Function: rotary encoder plus push button
- Material: aluminium alloy and stainless steel
- Rotation: 360 degrees continuous
- Resolution: 256, with 16 or 24 positions per revolution (one option)
- Input voltage: DC5V +/-0.5V
- Operating current: 8mA @ 5V
- Output signal: SPI
- Mechanical life: more than 1,000,000 cycles

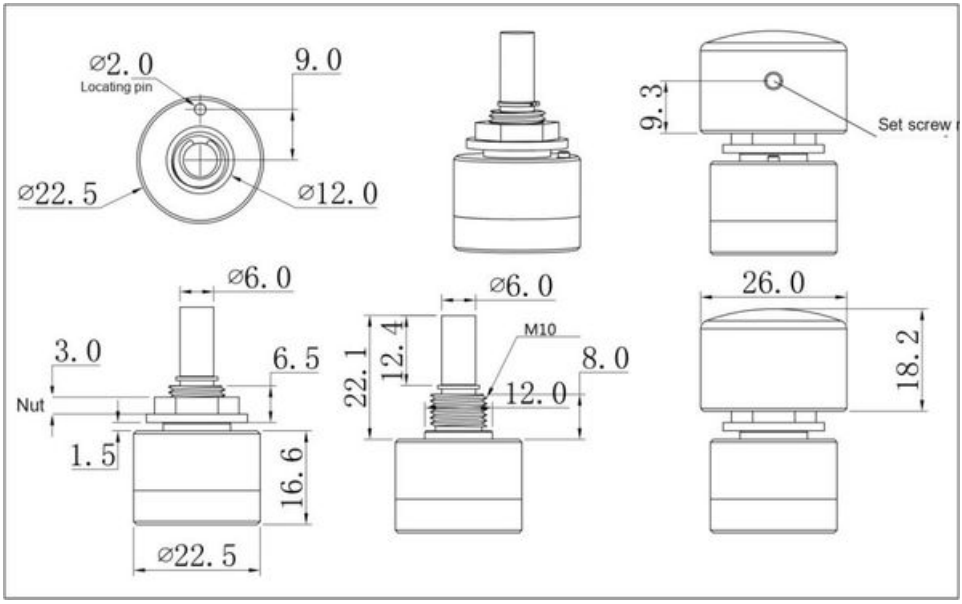

MKF-10-KNB Transmission gear control knob panel





- Transmission gear control knob panel
- 5 gear knobs + 2 buttons + 5 indicators
- Gear angle: 30 degrees
- CAN bus communication
- Power supply: DC24V
- Protection: IP65
- Customizable 3-8 gears

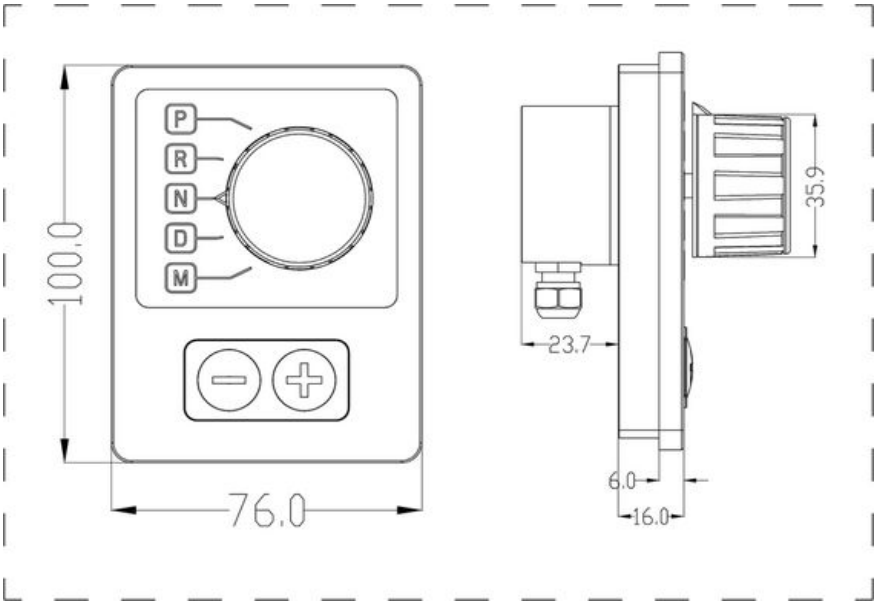

MKF-KB6 keypad with 2 axis joystick/Rotary/push down



- 6 keys keypad with 2 axis joystick
- Joystick with rotary and push down function
- Joystick with indication LED and controllable LED
- CAN out put
- RGB LED
- Adjustable Brightness backlight
- Customizable Key icon
- The joystick can be used alone

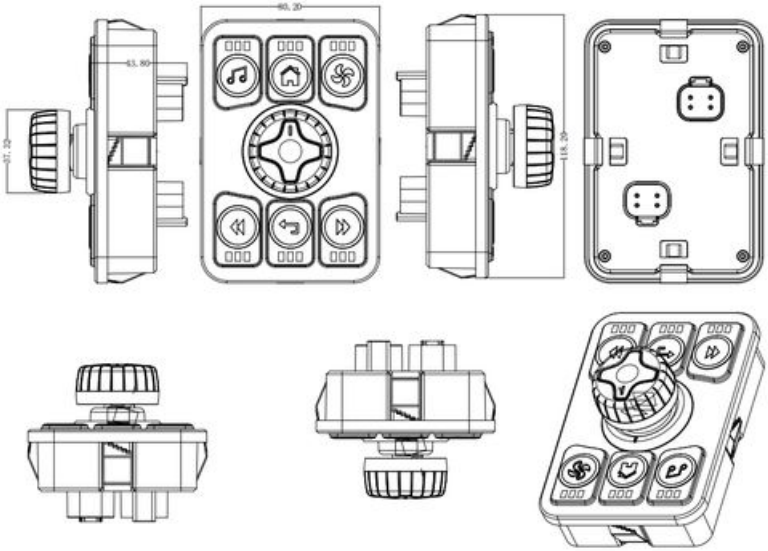

MKB-33N Centre control button panel



- 6 backlit push buttons with adjustable backlight brightness; each button carries 3 programmable RGB LEDs.
- Icons are laser etched and light-transmitting; brightness is adjustable and the patterns are customisable.
- Supply: DC24V (10-36V)
- Signal output: CAN
- Protection: IP67 above the panel

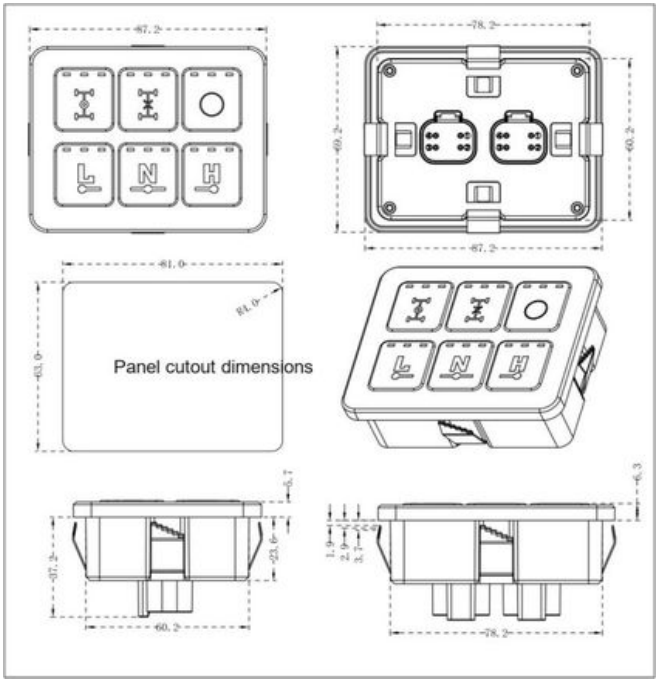

MKF-KP4 CAN button panel



- 4 programmable buttons with customer-specific icons.
- Dual CAN interface, supply DC24V (10-36V).
- Protection: IP65 above the panel.

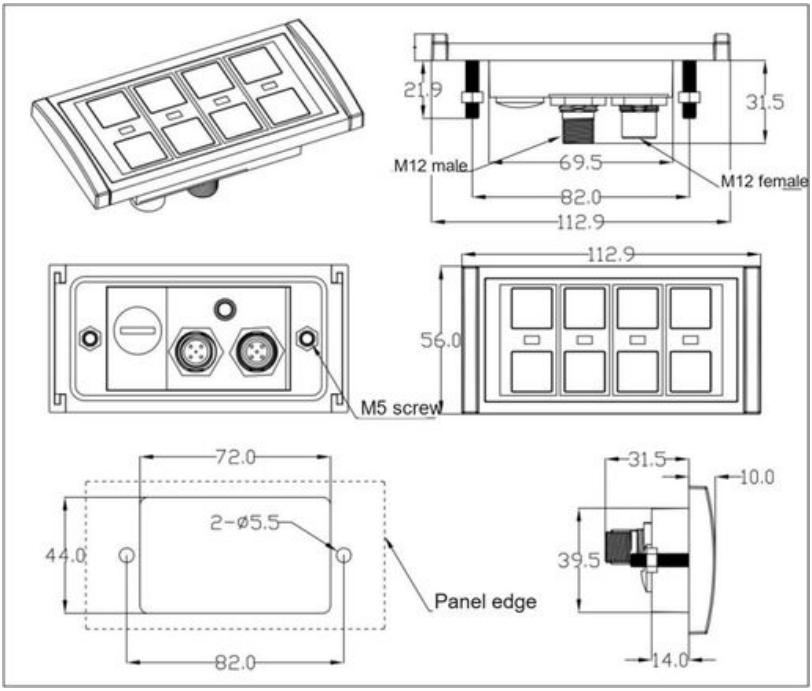

MKB-34N





MKB-24N is a keypad with laser pattern. Each button has an etched pattern and colored backlight, and three adjustable brightness LED indicators provide diagnostic feedback that flashes if a malfunction occurs. The button panel is sealed and protected, and it can be installed inside or outside the driver's cab.

Technical parameters:



- Keys: 12 keys
- Power consumption: less than 2W,
- Backlight: Independent RGB backlight for each button
- adjustable brightness blue LEDs per button
- Icons: Multiple customizable icons
- Power supply: DC9-36V
- Signal output: CAN
- Communication protocol: J1939
- Operating life: greater than 2 million times;
- Working temperature: -40 ℃ -+85 ℃
- Protection: IP67
- Weight: 175g
- Matching connector: DT04-6S

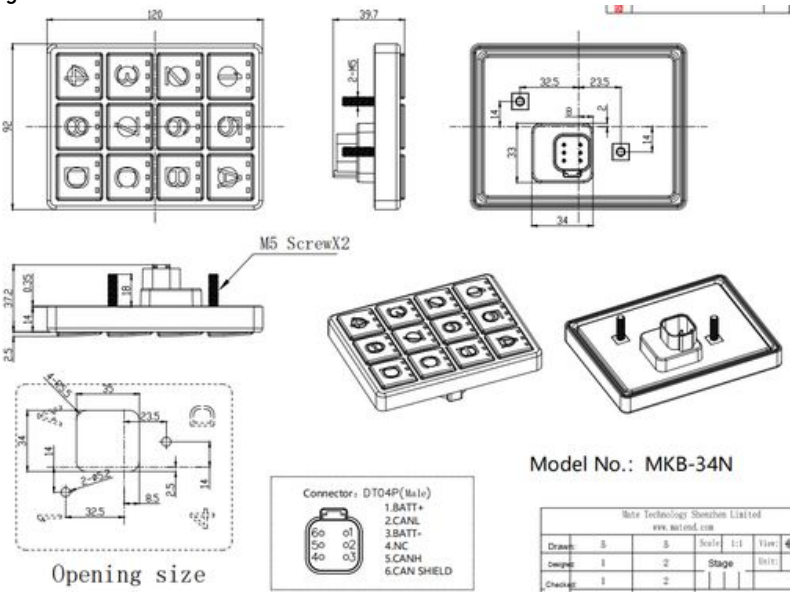

CAN Emulator board



CAN communication acquisition board, CAN interface, CAN2.0B protocol standard, supports standard frame ID and extended frame ID, user can modify ID, ID standard of CIA J1939 and CAN OPEN protocol. Supports 8 analog inputs, 20 buttons, 3 indicator lights, 1 CAN interface, and 1 RS232 interface. A control panel suitable for CNA communications.

- Analog input: 8-channel 0-5V signal input, 12-bit precision
- IO input: 20 (external button or switch)
- Indicator output: 1 power light, 1 function indicator, 2 programmable LED indicators
- Communication interface: CAN2.0 (J1939) and RS232
- Dimensions: (W)100X(L)70X(H)12
- Positioning hole size: (W)90X(L)60, through hole Ø3.0mmX4
- CAN parameters can be set (CAN communication parameters can be set through the RS232 interface)
- Support standard frame ID, extended frame ID and remote frame

MKF-AP-01 Foot pedal



- Tracked vehicle accelerator pedal
- Two-way accelerator pedal
- Spring return
- Mechanical angle: ±15 degrees
- Power supply: DC5±0.5V
- Signal output: dual interleaved signal output 0.5-2.5-4.5V (Center 2.5V)
- Power supply: 32mA/@5V
- IP rate: IP66
- Cable length: 30CM Cable with DEUTSCH Connector DTM06-6P

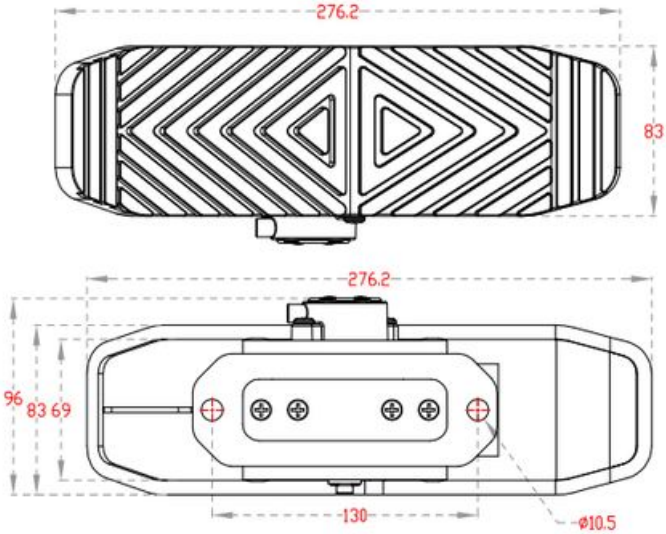

MKF-MJS757



- 10.1" Capacitive touchscreen
- Android 11 operating system
- H.264/H.265 compression
- Live view up to 9 RTSP or NDI HX streams directly on the device
- RTSP or ND HX to RTMP.
- Display up to 9 live streams when a monitor is connected through HDMI
- Ability to be control with connected mouse and keyboard
- PTZ control including presets, focus, zoom, exposure, and more
- Photo and video capture directly on the controller
- Integrated search functions to assist in easily adding cameras
- Most popular control protocols supported: VISCA (TCP/UDP/UART), Pelco-P, Pelco-D, ONVIF, and NDI HX
- Add up to 2048 devices
- Easily upgradable using USB or Micro-SD
- Connect up to 1 RS422/485 cameras directly
- 1 RS232 port to support legacy systems

360 * 177 mm



MKF-MJS756 camera control keyboard



- Suitable for camera remote control, video editing, educational recording and broadcasting, video conferencing systems, etc.
- Supports VISCA, PELCOD, PELCO-P and other protocols; 64-256 channel camera control, supports mixed use of different protocols, the keyboard stores 64 preset positions per channel; supports preset position cruise function.
- Display: 2 lines x 20 characters, blue backlight;
- Product size: 278(L) ×132(W) ×105(H)mm
- Weight: 1.32kg (w/o Power supply)
- Communication interface: RS422/ RS232/USB (network is not enabled)

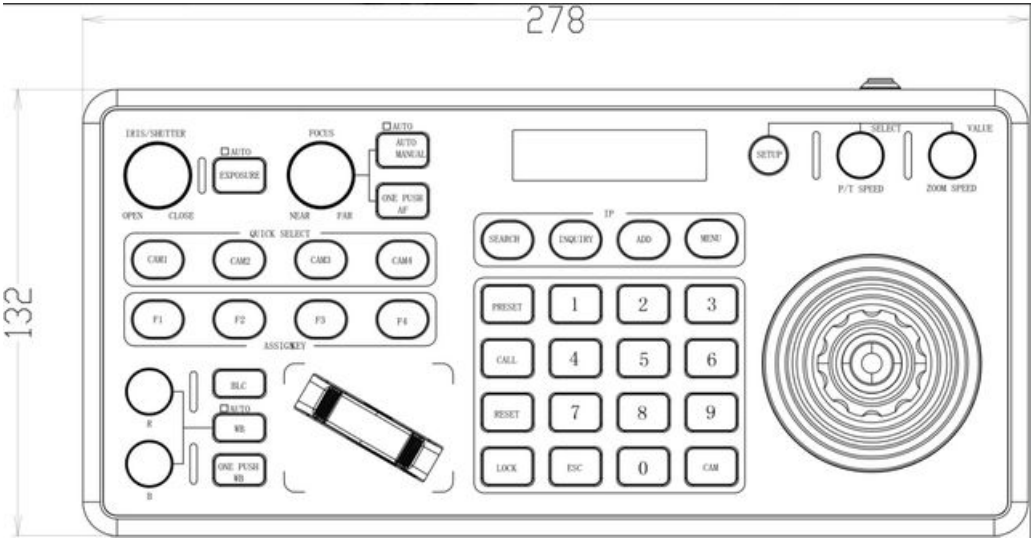

MKF-MJS-20



- USB Midi protocol, support broadcast software such as vMix, support windows, macOS operating system
- Support RS232 interface communication, support RS422 camera control
- Aluminum alloy shell, brushed panel
- 6 channels, 20 color backlight keys, the brightness of the key backlight can be adjusted
- Hall sensor push rod T-BAR, 15-level LED progress indicator
- RS232 serial port tally signal output (for connecting wireless tally transmitter)
- Dimensions: 325X118X40mm (height does not include buttons and T-BAR, the maximum height above the panel is 25mm)

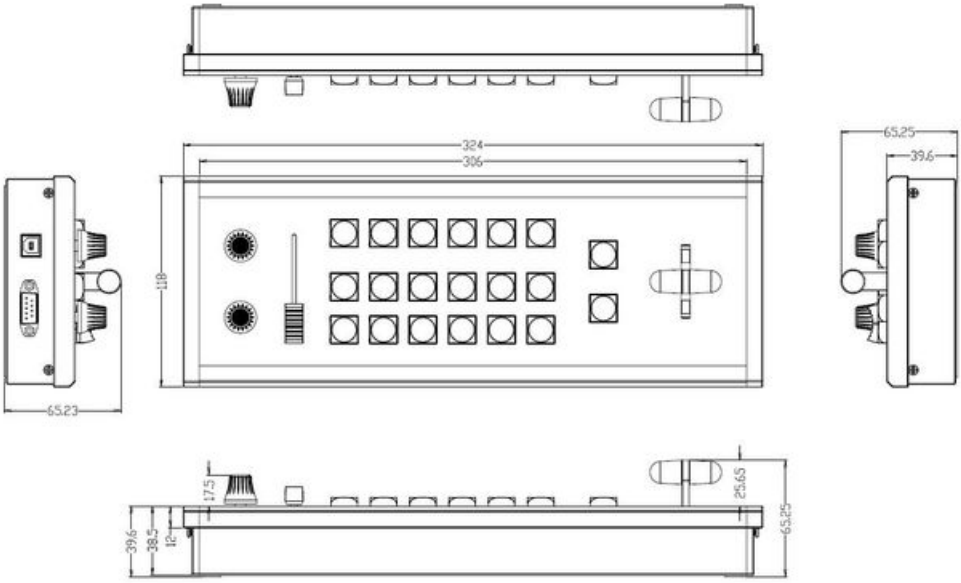

MKF-MJS-28



Aluminum alloy shell, 3-axis rugged joystick, 28 bi-color backlit buttons, suitable for camera remote control, video editing, education recording, video conference system, etc.
Support VISCA, POLYCOM, CISCO, CANON, Panasonic, PELCOD, PELCO-P and other protocols; Baud rate: 1200, 2400, 4800, 9600, 19200, 64-256 channel camera control, support mixed use of different protocols, keyboard stores 64 preset positions per channel; supports preset position cruise function.

- Joystick: 3-axis photoelectric joystick
- Display: 2 lines x 20 characters, blue backlight;
- Product size: 355(L) ×150(W) ×155(H)mm
- Weight: 1.47kg (w/o Power supply)
- Operating temperature: -20°C - 70°C
- Relative Humidity: 30% - 90% (w/o condensation)
- Power adapter: AC100-240V-12VDC/500mA
- Power: 2.7 W (not loaded line)
- Communication interface: RJ45/RS485(RS422)/ RS232/USB

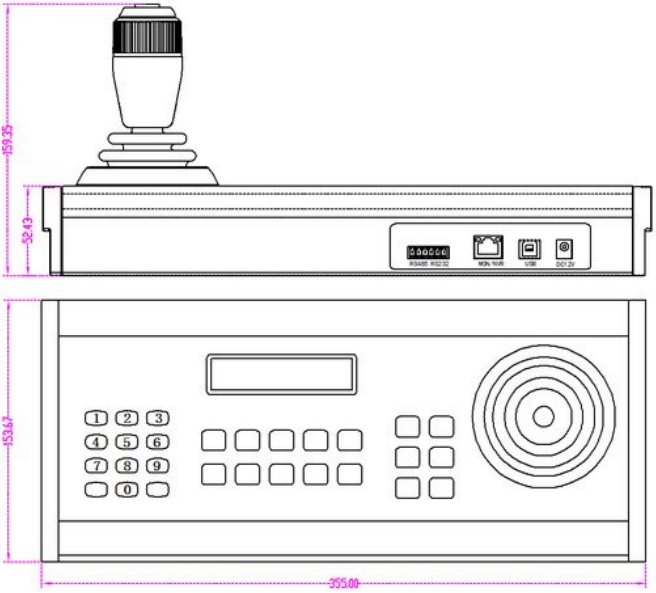

MKF-MJS-30



MKF-MJS-30A

3-axis Hall-type joystick, 30 RGB full-color backlit buttons, 2 knobs, 2.4-inch color LCD screen, suitable for camera remote control, video editing, education recording, video conference system, etc.Support VISCA, POLYCOM, CISCO, PANASONIC, PELCOD, PELCO-P and other protocols; support central control forwarding function (central control and keyboard control the camera at the same time), support USB HID protocol, plug and play.



MKF-MJS-30B

- Joystick: 3-axis Hall joystick
- Keys: 30 RGB full-color backlit buttons
- Knob: 2 knobs, 15-level LED progress indicator
- Display: 2.4-inch color LCD screen;
- Operating temperature: -20°C - 70°C
- Power adapter: AC100-240V-12VDC/500mA
- Communication interface: RJ45/RS485(RS422)/ RS232/USB

MKF-MJS-40



MKF-MJS-40A

MKF-MJS-40 video switcher is suitable for audio and video editing and live broadcast system, recording and broadcasting system.USB Midi protocol, support broadcast software such as vMix, support windows, macOS operating systems, support RS232 interface communication, support RS422 camera control TALLY interface. Provide free OEM service.



MKF-MJS-40B

- T-BAR Hall single-axis push rod (15-level progress indicator)
- 42 full-color buttons, each button has an independent RGB full-color backlight (software color matching)
- 2 knobs (encoder, with push-down switch), 15-level LED indication
- External interface: 1 RS232 (DB9 pin) communication port, 1 RS422 communication port,
- USB (plug & play) 1, RJ45 (spare) TALLY interface: TALLY (DB25 pin)
- Power supply: DC12V, there is a power switch at the rear
- Dimensions: 164 x 354 x 51mm (excluding rocker and knob size)

MKF-MJS-44



MKF-MJS-44 video switcher is suitable for audio and video editing and live broadcast system, recording and broadcasting system.

USB Midi protocol, support broadcast software such as vMix, support windows, macOS operating system, support RS232 interface communication, support RS422 camera control



- USB Midi protocol, support broadcast software such as vMix, support windows, macOS operating system
- Support RS232 interface communication, support RS422 camera control
- T-BAR Hall single-axis push rod (15-level progress indicator)
- 44 full-color buttons, each button has an independent RGB full-color backlight (software color matching)
- 11 knob potentiometer
- 3-axis Hall joystick
- External interface: 1 RS232 (DB9 pin) communication port, 1 RS422 communication port,
- USB (drive-free) 1, RJ45 (spare) TALLY interface: TALLY (DB25 pin)
- Power supply: DC12V, there is a power switch at the rear;
- Dimensions: 164 x 354 x 51mm (excluding rocker and knob size)

MKF-MJS-63



The video switcher is suitable for audio and video editing and live broadcast systems, recording and broadcasting systems.USB Hid, Midi protocol, support broadcast software such as vMix, support windows, macOS operating system, support RS232 interface communication, support RS422 camera control.

- Joystick: Hall type three-axis joystick
- T-type fader: Hall type T-type video fader, LED progress indicator
- Keys: 63 imported bi-color buttons
- Volume adjustment: 4-way audio mediation
- Power supply: DC12V/500Ma
- Communication interface: USBX1, RS232X1, RS422X1
- Static weight: 3.0KG
- Gross weight: 4.35KG
- Product size: 400X220X114mm
- Outer box size: 47x28x20cm

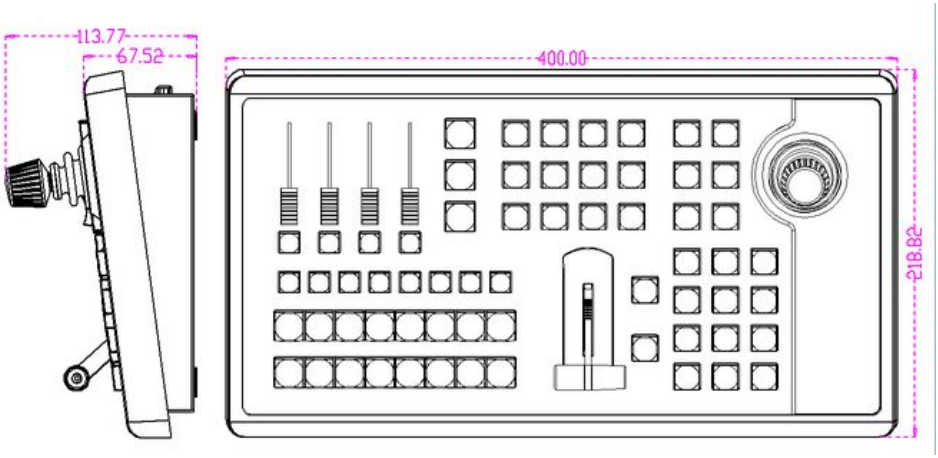



MATE TECHNOLOGY SHENZHEN LIMITED

MADE BY PROFESSIONAL

ADDRESS: 411, Bld. 1A, Zhida Industrial Park, Longgang District, Shenzhen, Guangdong Province, P.R China

Zip code: 518000

TEL/FAX: 86-755-8939 8907

EMAIL: info@matend.com

WEB: www.matend.com

202611