MADE BY PROFESSIONAL

深圳市米拓实业有限公司

MATE TECHNOLOGY SHENZHEN LIMITED

Mate Technology Shenzhen Limited dedicate to serving clients with our rich experience and profession of know-how, strong control of quality, and innovation on our products. Clients' satisfaction is our main goal. We provide flexible, cost-effective solutions for demanding applications through rapid services. We will work closely with our clients from 0 to 1 and listen to all their thoughts throughout the whole case from concept to production. What we provide is not only products but also technics and services. We display details of how w
e work to back up what we are advocating with solid and hard proof, and never compromise with profession and credibility. Whatever your requirements, we will make sure everything is in sight with the highest level of accuracy. **Made by professional, made by Mate Technology.**

Thumb Size Joystick .....1 - 12
Finger Size Joystick .....13 - 31
Hand Size Joystick.....32 - 60
Naval Controller and Joystick .....61 - 65
Desktop Joystick .....66 - 71
Wireless Remote Controller.....72
Accessories and Buttons.....73 - 80
PTZ Controller Joystick Keyboard .....81 - 89

MKF-TS02 Single axis joystick

A variety of handle colors and printing available, 1 axis, Hall sensor, full temperature range linear compensation, multi-point linearity correction, non-contact of moving parts and sensors, long life.

- Positioning method: spring automatically returns to the neutral position
- Operation angle: ±36 degrees (72 degrees)
- Power supply: DC3.3V or DC5V
- Power consumption: ultra-low power consumption, minimum working current 8mA, minimum working voltage 3.01V
- Signal output: analog voltage, a variety of specifications are optional
- Life span: more than 5 million times
- Temperature range: -40℃～+85℃
- Protection level: IP67 protection

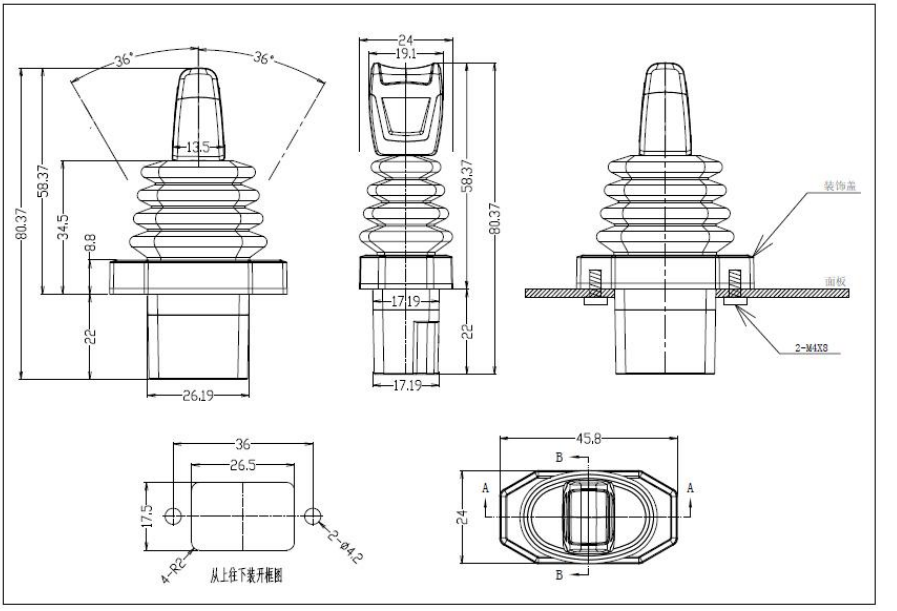

MKF-TS03 Single axis joystick (thumb stick)

MKF-TS03 series single-axis joystick. Adopt German imported Hall sensor, full temperature range linear compensation, multi-point linearity correction, moving parts and sensor non-contact, long life.

- 1 axis, Hall sensor
- Positioning method: center automatic return, center automatic return + one-way edge lock, one-way automatic return,
- 2 gears + 2 terminal reset, 3 gears + 2 terminal reset, 11 gears
- Operation angle: ±30 degrees (60 degrees)
- Power supply: DC5V (12MA)
- Signal output: analog voltage 0.5～4.5V； Redundant output optional
- Operating temperature: -40℃～+70℃ IP54 protection

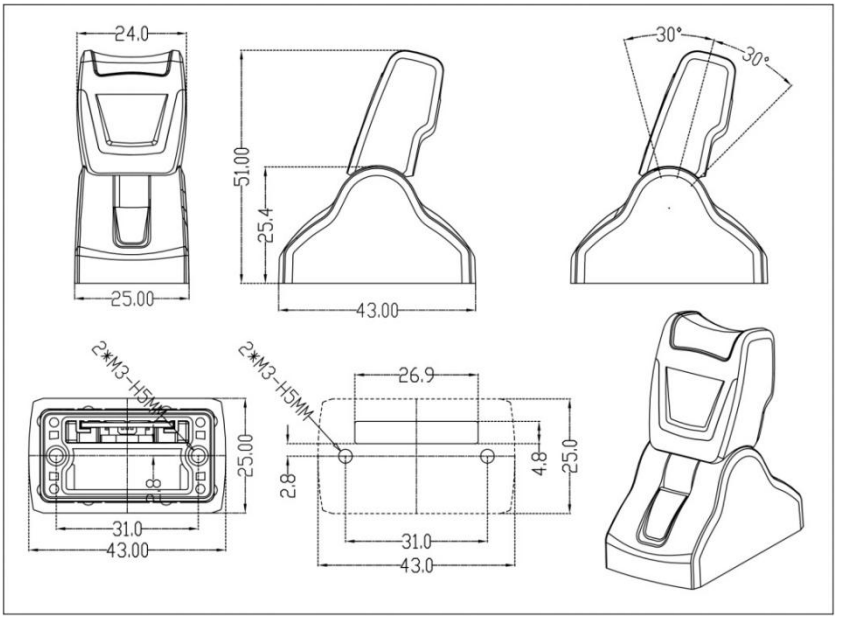

MKF-TS04 Single axis thumb joystick

- 1 axis, Hall sensor; Life span: more than 5 million times;
- Positioning method: center automatic return, center automatic return + one-way edge lock
- 2 gears + 2 terminal reset, 3 gears + 2 terminal reset, 11 gears (optional)
- Operation angle: ±35 degrees Signal output: 0.5-4.5V
- Power supply: DC5V/12MA Operating temperature: -40℃～+70℃

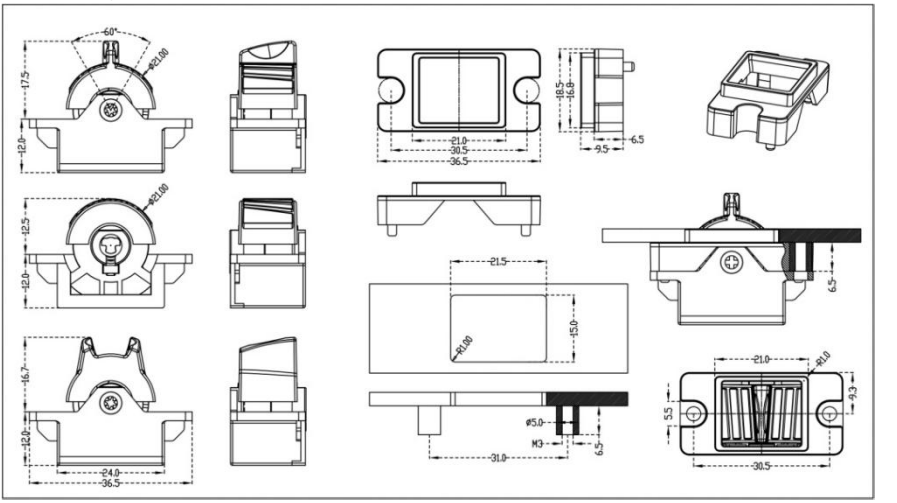

MKF-TS01 Single axis thumb joystick

- 1 axis, Hall sensor
- Indicating light: three-color LED light (white/red/green)
- Positioning method: the spring automatically returns to the neutral position
- Operation angle: ±30 degrees
- Signal output: 0.5-4.5V;Redundant output optional
- Power supply: DC5V/12MA
- Life span: more than 5 million times;
- Operating temperature: -40℃～+70℃

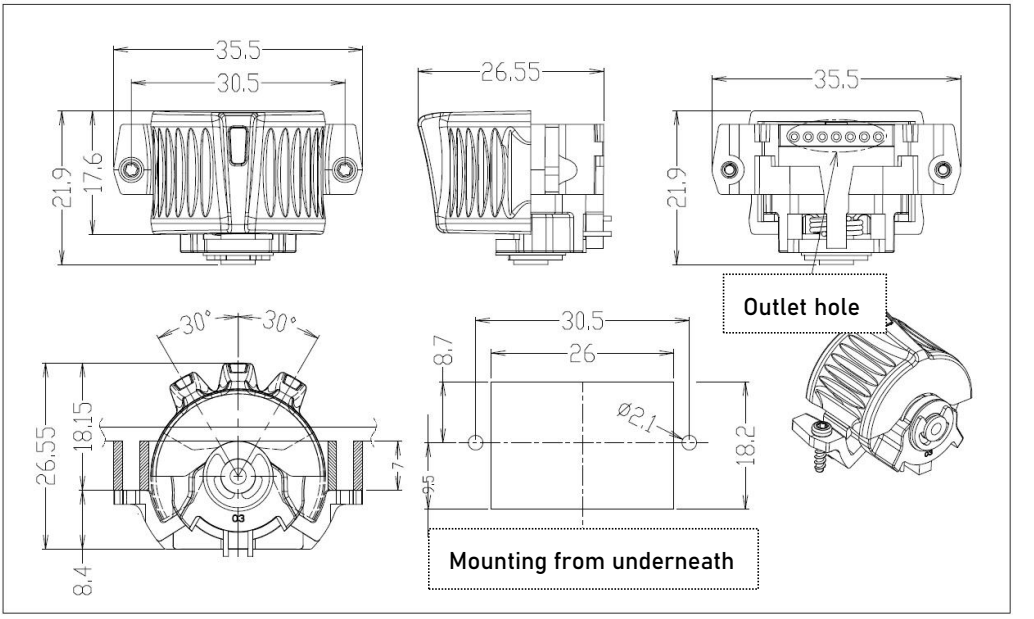

MKF-TS08 Single axis thumb joystick

Handle A

Handle B

- 1 axis, Hall sensor
- Positioning method: the spring automatically returns to the neutral position
- Operation angle: ±25 degrees
- Signal output: 0.5-4.5V@DC5V
- Power supply: DC5V/12MA
- Life span: more than 5 million times
- Operating temperature: -40℃～+70℃

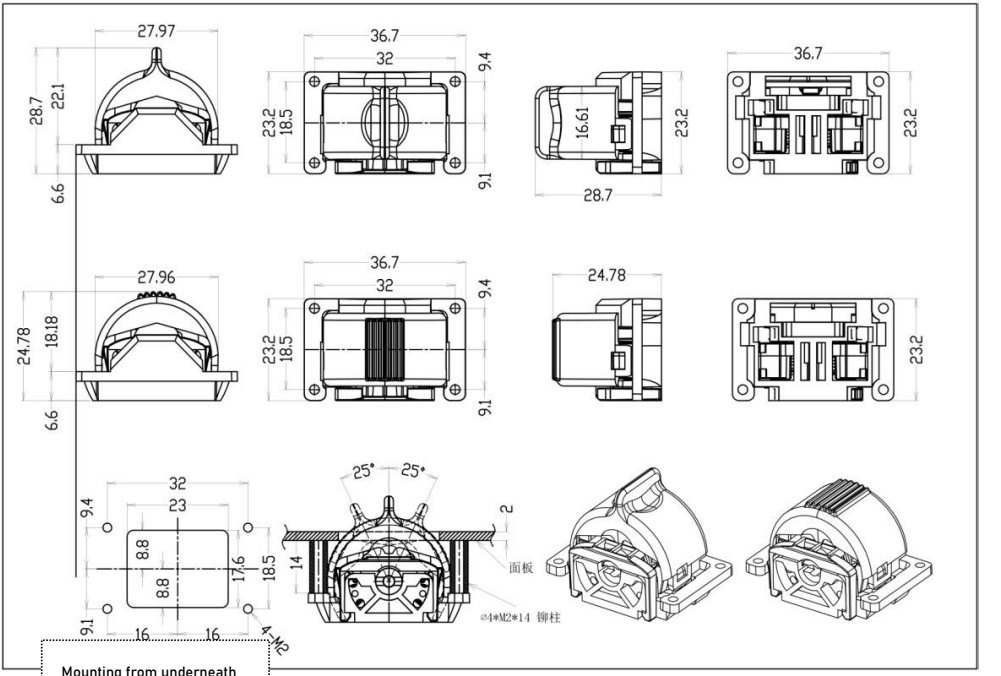

Mounting from underneath

MKF-TS06 Single axis thumb joystick

Handle A

Handle B

- 1 axis, Hall sensor
- Positioning method: the spring automatically returns to the neutral position
- Operation angle: ±30 degrees
- Signal output: 0.5-4.5V
- Power supply: DC5V/12MA
- Life span: more than 5 million times
- Operating temperature: -40℃～+70℃

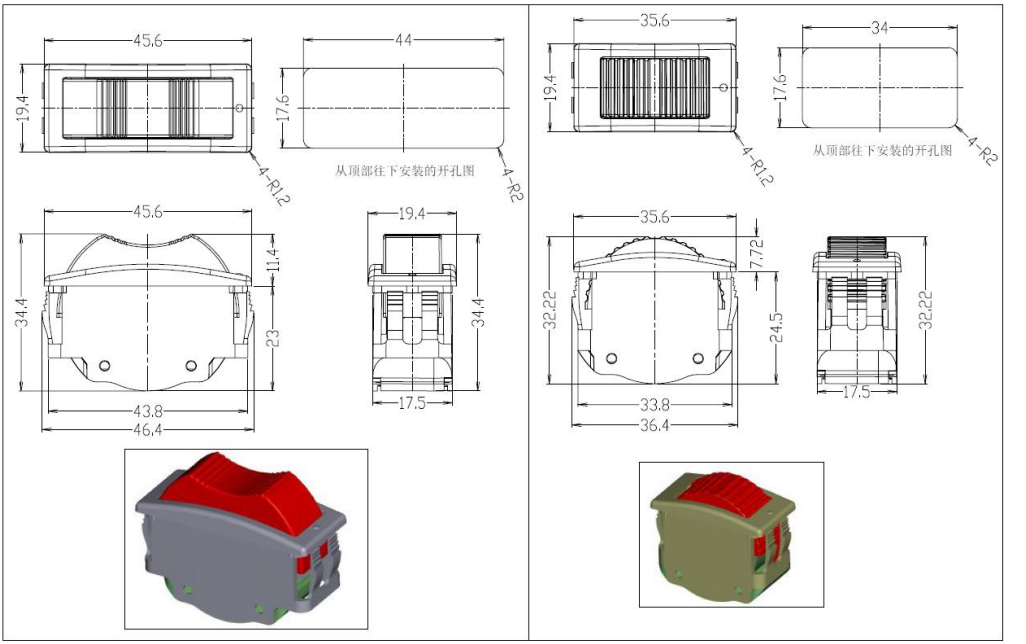

MKF-TS07 Waterproof single-axis joystick (finger wheel)

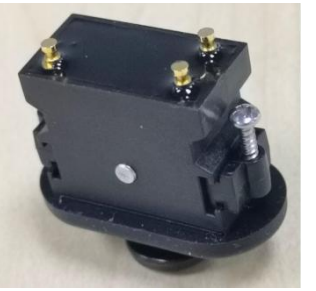

- 1 axis, Hall sensor operating angle: ±24°
- Power supply: DC5V/12MA Signal output: 0.5-4.5V
- Life span: more than 5 million times Operating temperature: -40℃～+70℃
- Positioning method: the spring automatically returns to the neutral position or the 3rd gear keeps positioning

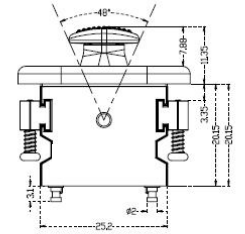
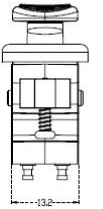
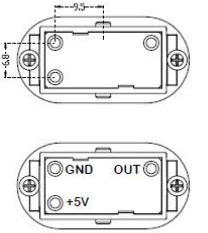

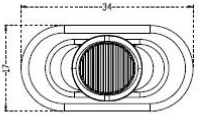
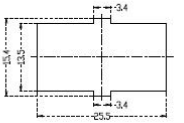
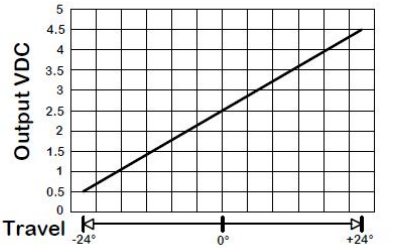

Slider Module Cutout

Single AxisyProportional

Supply Voltage :	DC5.0±0.5V
Supply Current:	10±2ma
Output Voltage low:	0.43-0.6V
Output Voltage Mid:	2.50±0.05
Output Voltage high:	4.3-4.58
Cycle life:	>4 Million cycles
Operation Temperature range:	-40 to +70 °C
Ingress Rating	:IP67

- Operation Proportional: Spring return to center
- Operation:3 position detented (on-off-on)

Output:0.5-2.5-4.5 VDC
Travel: +/-24°

MKF-TS09 Single axis Hall/Potentiometer thumb joystick

MKF-TS09 is a professional Single-axis finger operated joystick, forward and backward directional operated . Small and easy to install, Spring return to center automatically, Suitable for remote control unit, off-highway vehicle and industrial panel control.

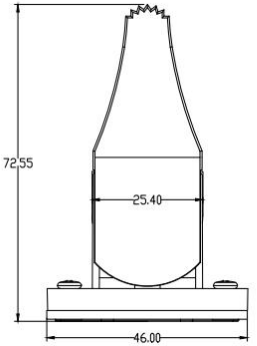

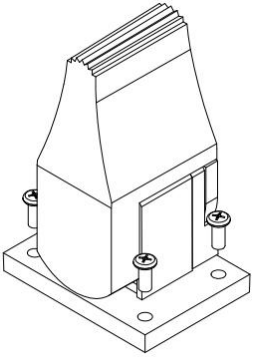

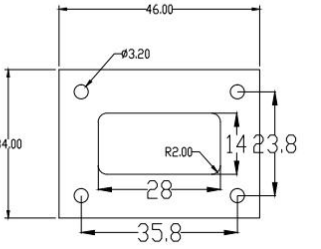

MKF-TS12 Single axis Potentiometer thumb joystick

MKF-TS12 is a professional Single-axis finger operated joystick, typical application on remote control unit, off-highway vehicle and industrial panel control.

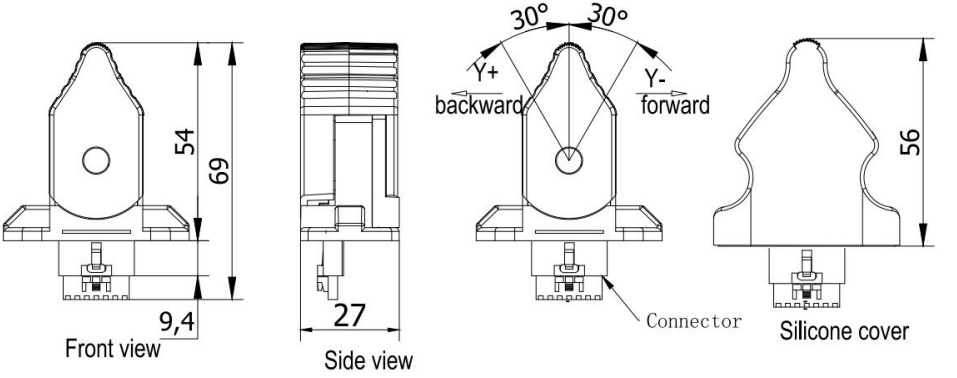

MKF-TS05 Waterproof three-position switch

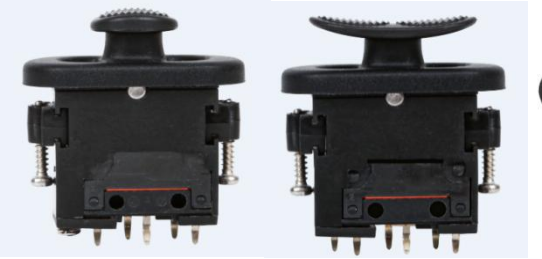

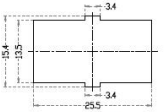

Slider Module Cutout

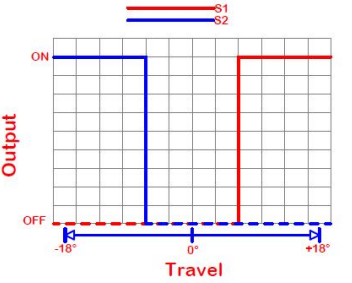

Voltage :	30Vdc
Supply Current:	2A
Cycle life:	>1 Million cycles
Operation Temperature range:	-40 to +85°C
Ingress Rating	:IP67

-RC: Return to middle

-Mo: 3 position lock

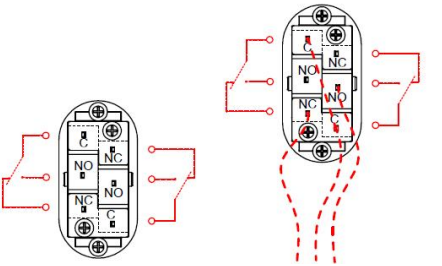

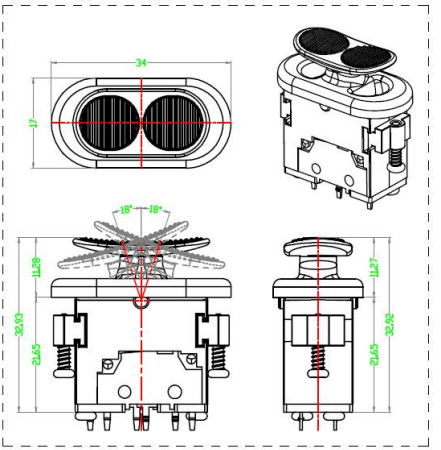

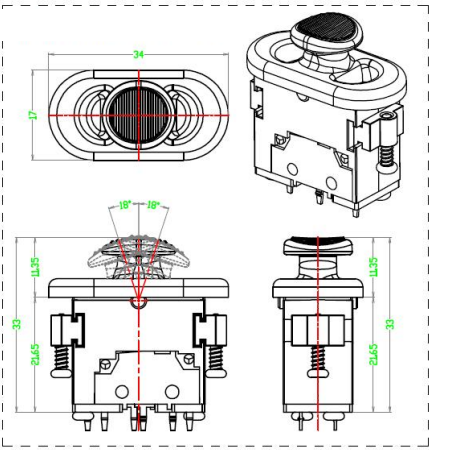

MKF-JS09 2-axis joystick

Optional sink bezel

- 1-axis or 2-axis, Hall sensor, 4 types of handles
- Operation mode: Round limiter (360 degree range)
  Straight limiter (only front and back, no left and right)
- Returning method: spring automatic return
- Operation angle: XY axis ±25° diagonal ±31°
- Power supply: DC5V
- Signal output: 0-5V (or 0.5-4.5V), USB2.0
- Life span: 5 million times
- Material: synthetic engineering plastic handle
- Replacement accuracy: less than 2%
- Operating temperature: -40℃～+70℃
- Storage temperature: -50℃～+80℃
- Protection level: part of the panel is IP67

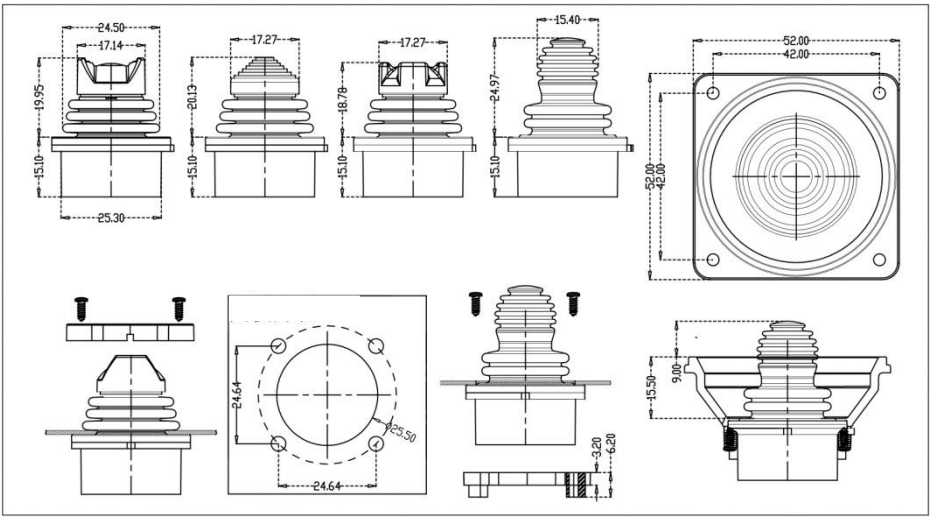

MKF-JS09-V2 2-axis joystick

- 1 or 2-axis, hall sensor
- Operating range: square / straight / cross
- Return method: spring automatic return
- Operating angle: XY axis ±25°
- Power supply: DC5V (4.5-5.5V)
- Signal output: 0.5-2.5-4.5V
- Lifespan: 5 million times
- Material: synthetic engineering plastic handle
- Repeated return accuracy: less than 5%.
- Operating temperature: -40℃～+70℃
- Storage temperature: -50℃～+80℃
- Protection level: above panel IP67

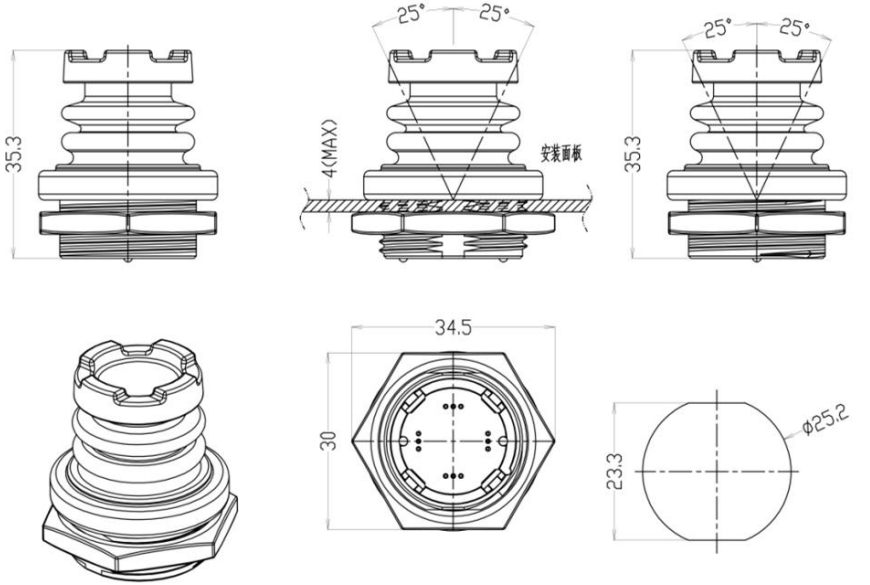

MKF-JS24 Remote control Joystick

The rubber handle has an orthogonal guiding function and has a good control feel. It is specially designed for the field of industrial remote controllers. There are many configurations, which can replace other brand products.

- 2-axis, Hall sensor
- Positioning method: The spring automatically returns to the neutral position
- Operating range: square limiter, with orthogonal cross guide
- Gear position feel: With gear shock feeling in the middle position, 4 gears each (optional)
- Operating angle: ±25°
- Power supply: DC5V, minimum 4.1V, maximum 5.5V
- Signal output: analog voltage 0.5-2.5-4.5V@DC5V power supply
- Lifespan: more than 5 million times
- Return accuracy: less than 0.8%.
- Operating temperature: -40℃～+85℃
- Protection level: IP65 above the panel

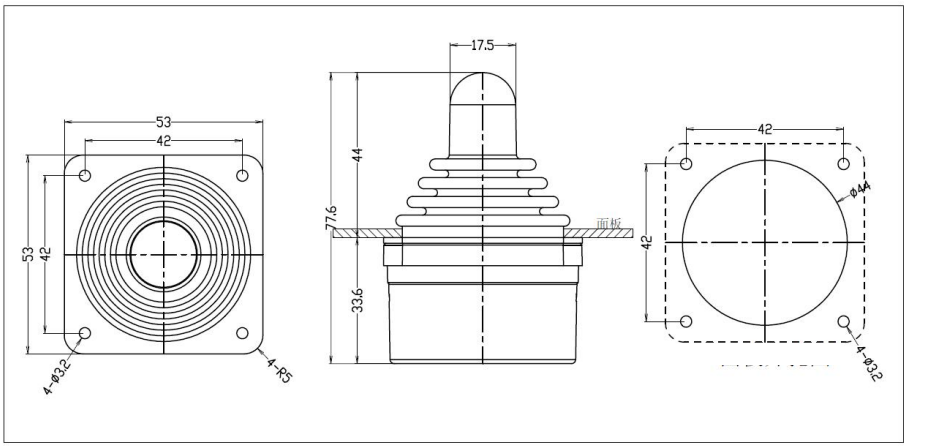

MKF-JS19/H38 SERIES 3-axis Hall joystick

- Three-axis, Hall sensor
- Button: 1 button (reset)
- Operation angle: XY axis ±20°, Z axis ±30°
- Power supply: DC5V, 12-24V (optional)
- Signal output: analog voltage 0-5V, RS232, RS422, RS485, USB
- Life span: 5 million times; button 1 million times;
- Material: aviation aluminum alloy and ABS+PC material
- Replacement accuracy: less than 0.8%
- Operating temperature: -40℃～+70℃
- Protection level: IP65 above the panel

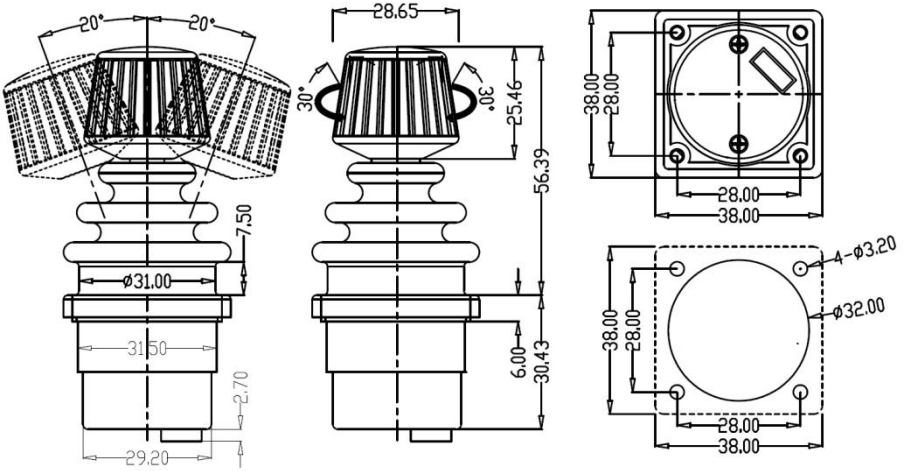

MKF-JS25/H38 SERIES 2-axis Hall joystick

Suitable for electric wheelchairs, machinery and equipment

- 2 axes, Hall sensor
- Operation angle: XY axis ±20° diagonal ±28°
- Power supply: DC5V, 12-24V (optional)
- Signal output: 0-5V (or 0.5-4.5V), RS232, RS485, USB, CAN
- Life: 5 million times;
- Material: Aluminum alloy handle
- Replacement accuracy: less than 1%.
- Operating temperature: -40℃～+70℃
- Storage temperature: -50℃～+80℃
- Protection level: IP65 above the panel

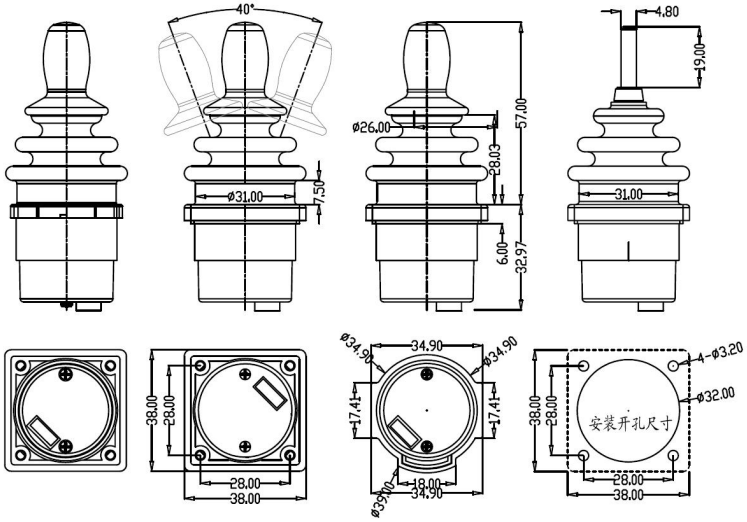

MKF-JS26/H38 SERIES 2-axis Hall joystick

Suitable for desktop systems and industrial equipment

- 2 axis, Hall sensor, 1 button (momentary button, reset)
- Operation angle: XY axis ±20° diagonal ±28°
- Power supply: DC5V, 12-24V (optional)
- Signal output: 0-5V (or 0.5-4.5V), RS232, RS485, USB, CAN
- Life span: 5 million times; button 1 million times
- Material: Aluminum alloy handle
- Replacement accuracy: less than 0.8%
- Operating temperature: -40℃～+70℃
- Protection level: IP65 above the panel

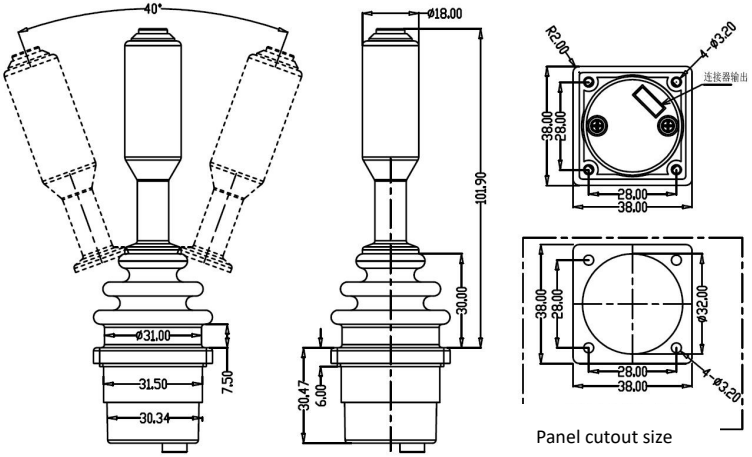

MKF-JS27/H81 SERIES 2-axis Hall joystick

Suitable for Robots, medical equipment, industrial equipment

- 2-axis Hall sensor
- Material: aluminum alloy shell, stainless steel shaft
- Operation angle: ±20°
- Power supply: DC5V
- Signal output: 0-5V (0.5-4.5V)
- Digital interface (optional): RS232, CAN
- Life span: more than 5 million times
- Replacement accuracy: less than 0.1%
- Protection level: IP65 above the panel
- Operating temperature: -40℃～+70℃

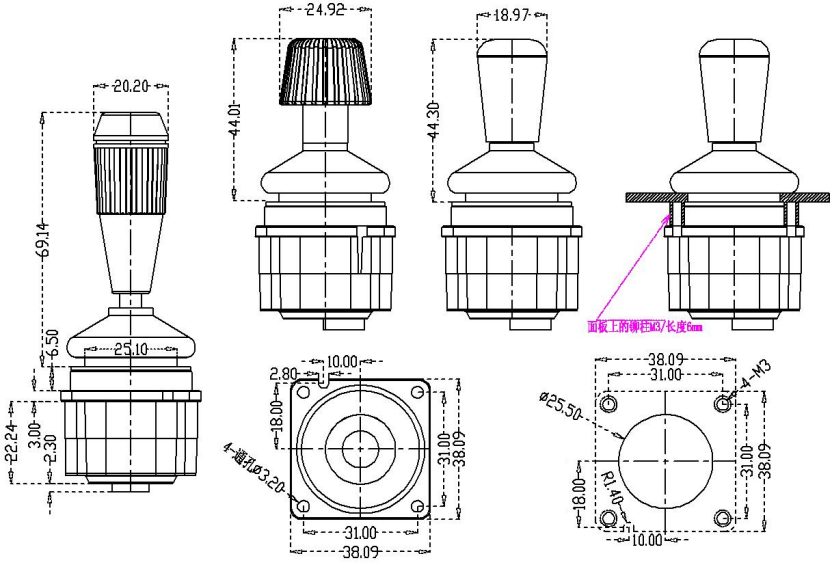

Panel cutout size

MKF-JS66 3-axis Hall joystick

Suitable for Robots, medical equipment, industrial equipment

- 3-axis Hall sensor
- Material: plastic shell, stainless steel shaft
- Operation angle: XY axis ±15°, Z axis ±30°
- Power supply: DC5V,12-24V (optional)
- Signal output: 0-5V (or 0.5-4.5V), RS232, RS485, USB, CAN
- Life span: more than 5 million times
- Replacement accuracy: less than 0.1%.
- Protection level: IP65 above the panel
- Operating temperature: -40℃～+70℃

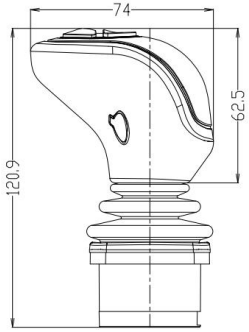

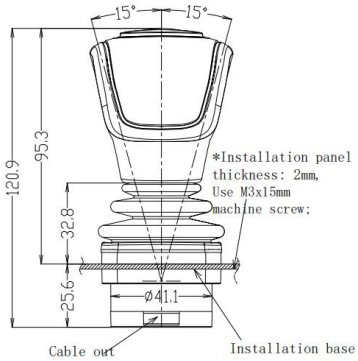

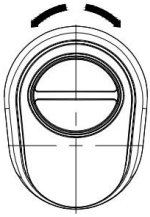

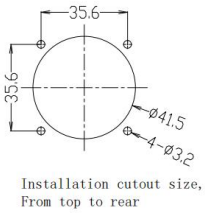

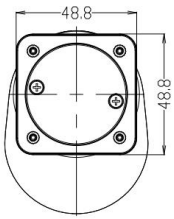

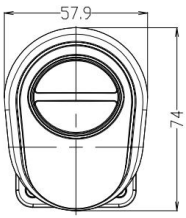

MKF-JS08/H44 SERIES 3-axis Hall Joystick

Suitable for industrial robots, medical equipment, optical instruments

- Three-axis, Hall sensor
- Operating range: round, straight, cross
- Button (optional): no button
- Operation angle: XY axis ±20° , Z axis ±18°
- Power supply: DC5V, 12-24V (optional)
- Signal output: 0-5V (0.5-4.5V), RS232, RS485, USB, CAN (2.0B)
- Life span: 5 million times
- Material: stainless steel shaft and synthetic plastic
- Replacement accuracy: less than 1%.
- Operating temperature: -40℃～+70℃
- Storage temperature: -50℃～+80℃
- Protection level: IP65 above the panel

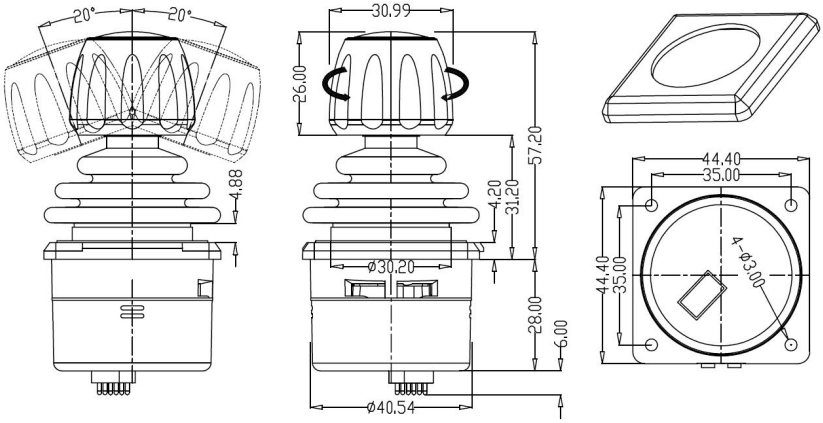

MKF-JS03/H44 SERIES 3-axis Hall Joystick

Suitable for industrial robots, medical equipment, optical instruments

- Three-axis, Hall sensor
- Operating range: round, straight, cross
- Button: 1 button
- Operation angle: XY axis ±20°, Z axis ±18°
- Power supply: DC5V, 12-24V (optional)
- Signal output: 0-5V (0.5-4.5), RS232, RS485, USB, CAN (2.0B)
- Life span: 5 million times
- Material: stainless steel shaft and synthetic plastic
- Replacement accuracy: less than 1%.
- Operating temperature: -40℃～+70℃
- Storage temperature: -50℃～+80℃
- Protection level: IP65 above the panel

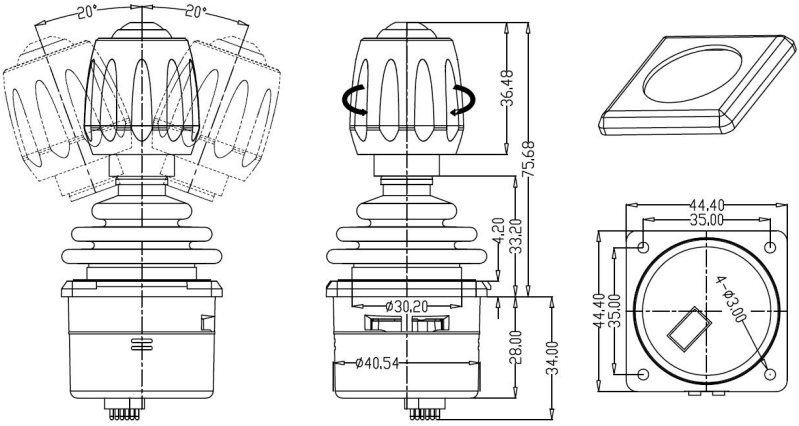

MKF-JS20/H44 SERIES 3-axis retractable joystick

The handle can be compressed 10mm for use in portable devices

Round Limiter

- Compression distance: 10mm
- 3-axis, Hall sensor
- Operation angle: XY axis ±20°, Z axis ±18°
- Power supply: DC5V, DC12V optional
- Signal output: 0-5V (or 0.5-4.5V)
- Communication: RS232, RS422, CAN, USB
- Life span: 5 million times
- Replacement accuracy: less than 0.8%
- Operating temperature: -40℃～+70℃
- Storage temperature: -50℃～+80℃
- Protection level: IP65 above the panel

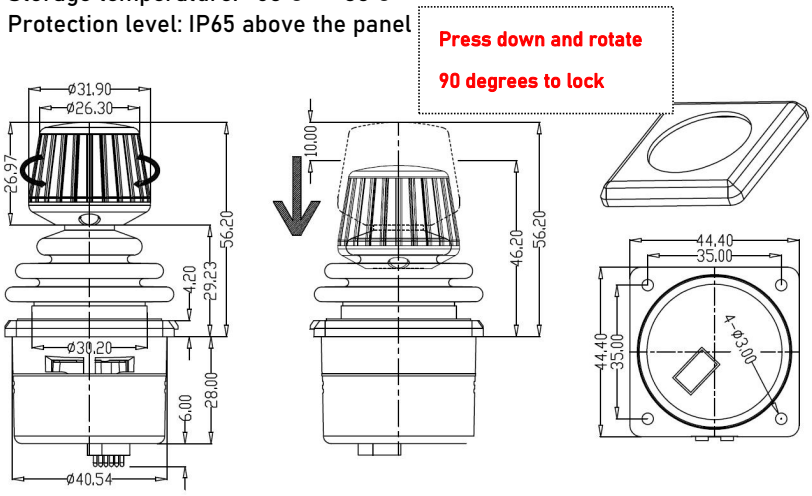

MKF-JS04/H44 SERIES Hall joystick (1-3 axis)

Suitable for industrial robots, medical equipment, optical instruments

With decorative cover

with top button

without button

- One, two, three axis, Hall sensor,
- Button: 1 button (reset) or no button
- Operation angle: XY axis ±20°, Z axis ±18°
- Power supply: DC5V, 12-24V (optional)
- Signal output: 0-5V (or 0.5-4.5V), RS232, RS485, USB, CAN (2.0B)
- Life span: 5 million times
- Material: stainless steel shaft and synthetic plastic
- Replacement accuracy: less than 0.8%.
- Operating temperature: -40℃～+70℃
- Storage temperature: -50℃～+80℃
- Protection level: IP65 above the panel

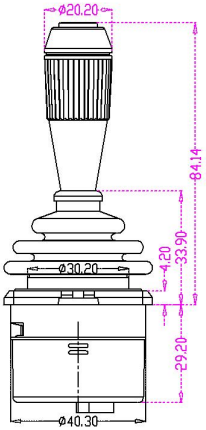

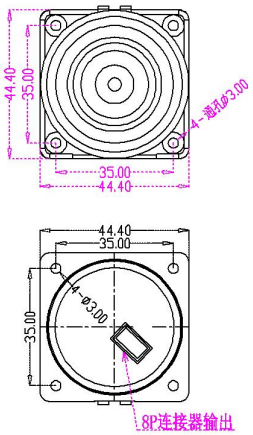

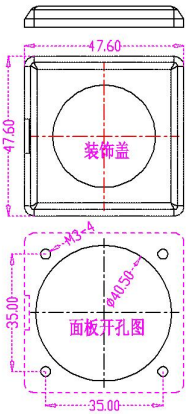

MKF-JS10/H44 SERIES 3-axis Hall joystick

Suitable for use in portable devices

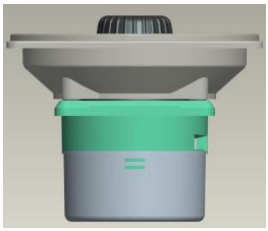

- With decorative ring
- 2 or 3 axis, Hall sensor
- Operation angle: XY axis ±20°, Z axis ±18°
- Power supply: DC5V, DC12V optional
- Signal output: 0-5V (or 0.5-4.5V)
- Communication interface: RS232, RS422
- Life span: 5 million times
- Replacement accuracy: less than 0.8%.
- Operating temperature: -40℃～+70℃
- Storage temperature: -50℃～+80℃
- Protection level: IP65 above the panel

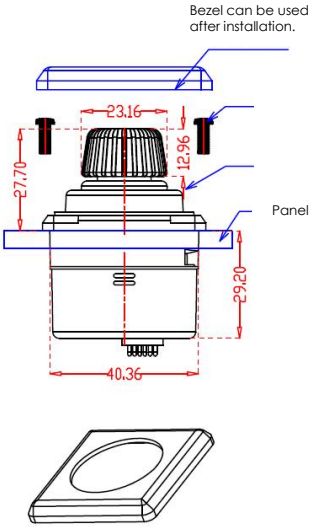

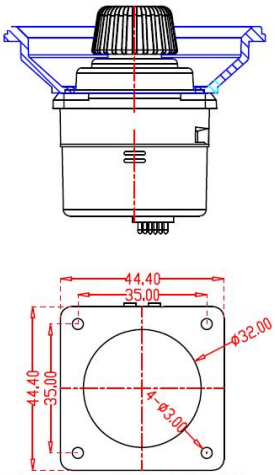

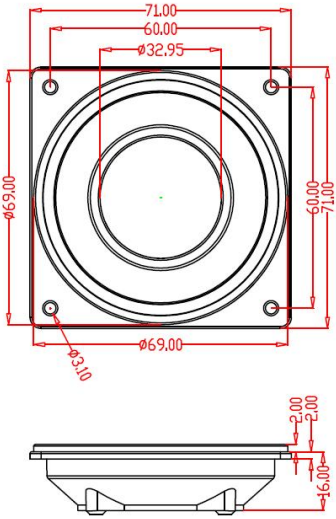

MKF-JS47/H44 SERIES 1-3 axis joystick

Used in industrial robots, robots, medical equipment, optical instruments

Round limiter
Cross limiter
Straight limiter

- 1/2/3 axis optional, Hall sensor
- Button: 1 button (momentary, reset)
- Operating angle: XY axis ±20°, Z axis ±18°
- Power supply: DC5V, 12-24V (optional)
- Signal output: 0-5V, RS232, RS485, USB, CAN (2.0B)
- Life span: 5 million times
- Material: stainless steel and engineering plastics
- Replacement accuracy: less than 0.8%.
- Protection level: IP65 above the panel
- Operating temperature: -40℃～+70℃

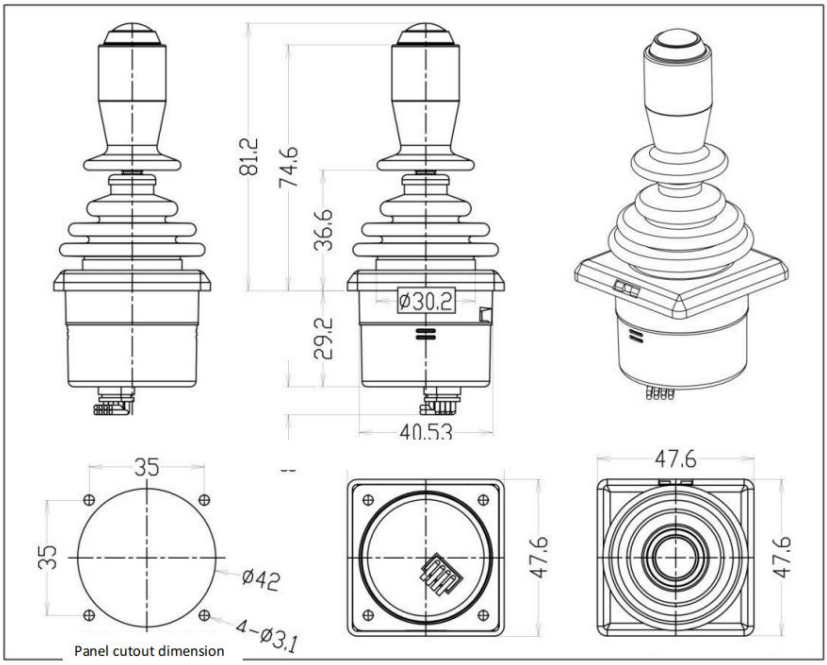

MKF-JS07/H55 SERIES 3-axis Hall joystick

Used in TV cameras, industrial robots, medical equipment, optical instruments

- Three-axis, Hall sensor
- Button: 1 button (reset)
- Operating angle: XY axis ±25°, Z axis ±36°
- Power supply: DC5V, 12-24V (optional)
- Signal output: 0-5V (or 0.5-4.5V), RS232, RS485, RS422, USB, CAN (2.0B)
- Life span: 5 million times; button 1 million times
- Material: aluminum alloy, stainless steel and engineering plastics
- Replacement accuracy: less than 0.1%.
- Protection level: IP54 above the panel
- Operating temperature: -40℃～+70℃

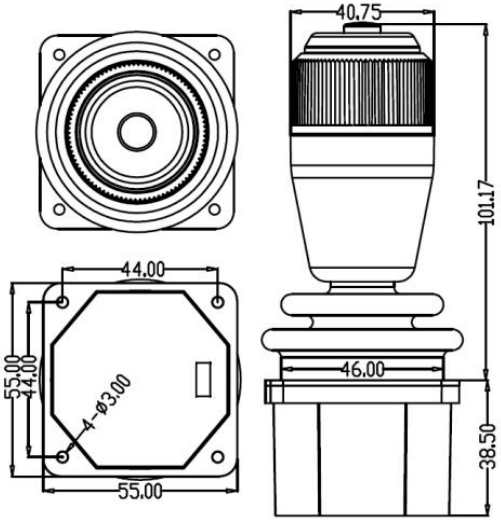

MKF-JS29/H55 SERIES 2-axis Hall joystick

Used in industrial robots, medical equipment, optical instruments

- 1-2 axis, Hall sensor
- Operation angle: XY axis ±25°
- Operating range: round, straight, cross
- Power supply: DC5V, 12-24V (optional)
- Signal output: 0-5V (or 0.5-4.5V), RS232, RS485, USB, CAN (2.0B)
- Life span: 5 million times; button 1 million times
- Material: aviation aluminum alloy and ABS+PC material
- Replacement accuracy: less than 0.8%
- Operating temperature: -40℃～+70℃
- Protection level: IP65 above the panel

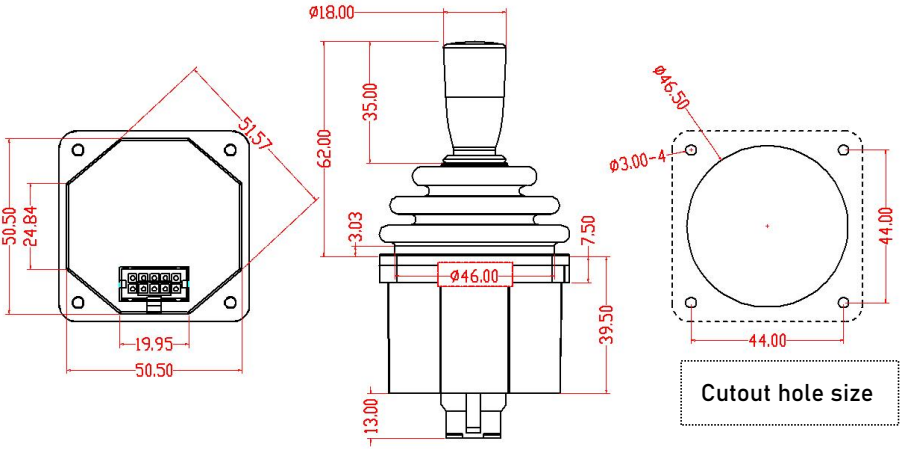

MKF-JS30/H55 SERIES

Used in machinery and equipment, industrial control, engineering machinery

- 1-2 axis, Hall sensor
- Operation angle: XY axis ±25°
- Power supply: DC5V, 12-24V (optional)
- Signal output: 0-5V (or 0.5-4.5V), RS232, RS485, USB, CAN (2.0B),
- Life span: 5 million times
- Material: stainless steel, aluminum alloy and engineering plastics
- Replacement accuracy: less than 1%.
- Operating temperature: -40℃～+70℃
- Protection level: IP65 above the panel

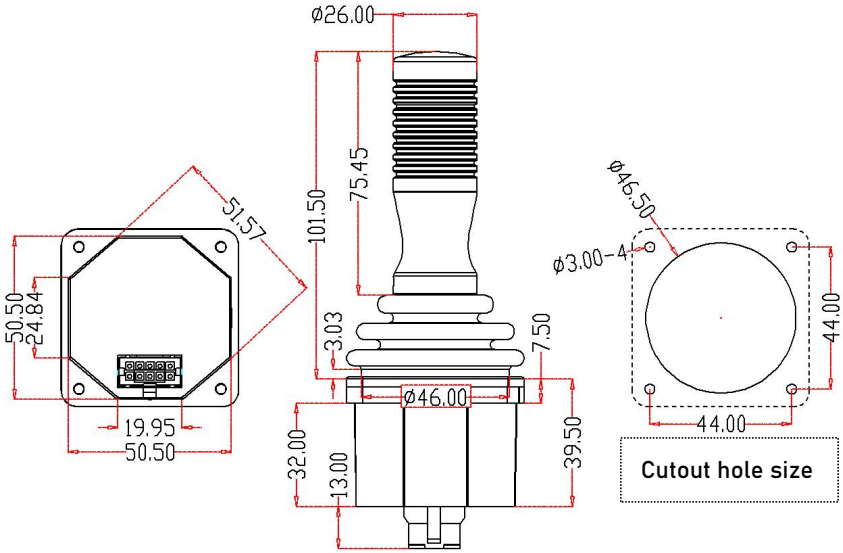

MKF-JS31/H55 SERIES 2-axis Hall joystick

Used in machinery and equipment, industrial control, construction machinery

- 2-axis Hall sensor, 1 button (momentary, reset)
- Operation angle: XY axis ±25°
- Power supply: DC5V or 12-24V（Optional）
- Signal output: analog voltage 0-5V, RS232, RS485, USB, CAN (2.0B)
- Life span: 5 million times; button> 5 million times
- Material: aviation aluminum alloy and ABS+PC material
- Replacement accuracy: less than 0.8%.
- Operating temperature: -40℃～+70℃
- Protection level: IP65 above the panel

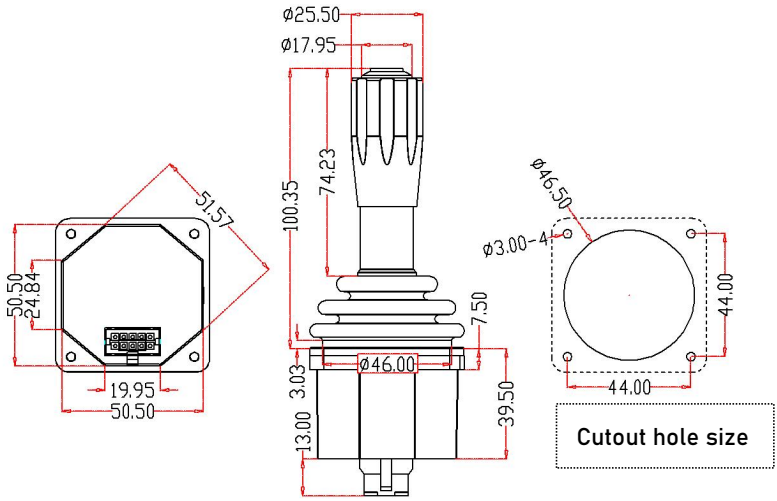

MKF-JS91 3-axis Hall joystick

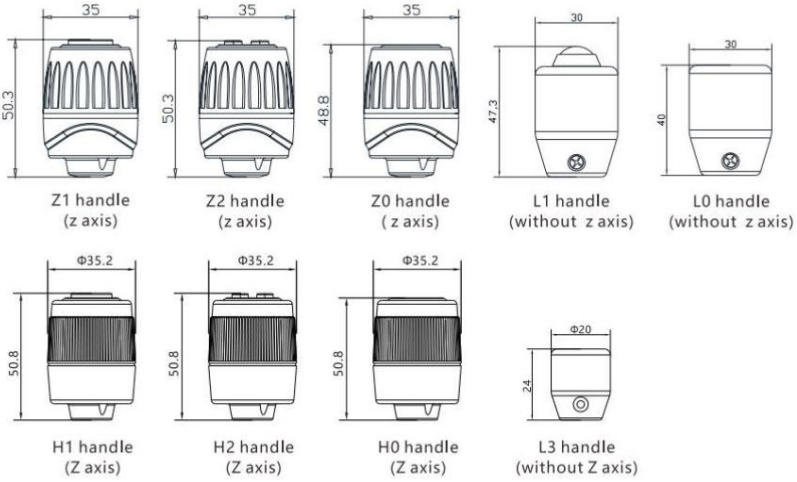

- The spring automatically returns to the neutral position
- Operation range: Straight,cross,round,square etc.
- Signal output: USB/Analogue voltage/RS232/CAN
- Operation angle: XY axis ±28°, Z axis ±42°
- IP65 protection; temperature: -30 degrees to +70 degrees
- Power supply: DC5V or DC9-36V
- Protection level: IP65 above the panel

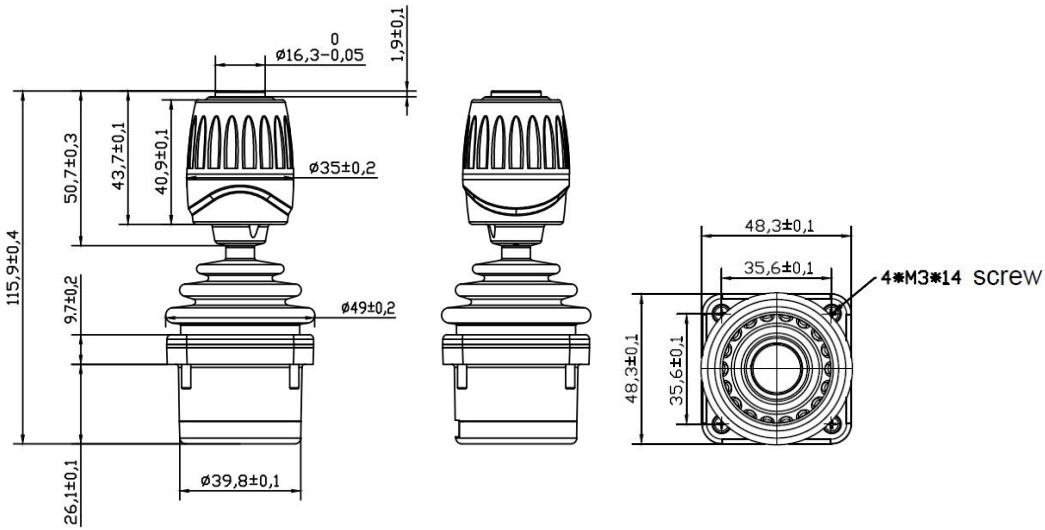

MKF-JS99 Multi Axis Hall joystick

- Material stainless steel + engineering plastic
- Protection: IP65 above the panel
- Positioning: spring returns, friction hold optional
- Operating angle X/Y: ±25 degrees
- Sensor: Hall sensor
- Power supply: DC5V
- Signal output: Analog voltage (0±0.1) Vdc ~ (2.5±0.1)Vdc~(5±0.1)Vdc
- Operating life: 10 million times
- Working temperature: -40℃~+70℃
- Protection level: IP65 or above
- Current: <100mA

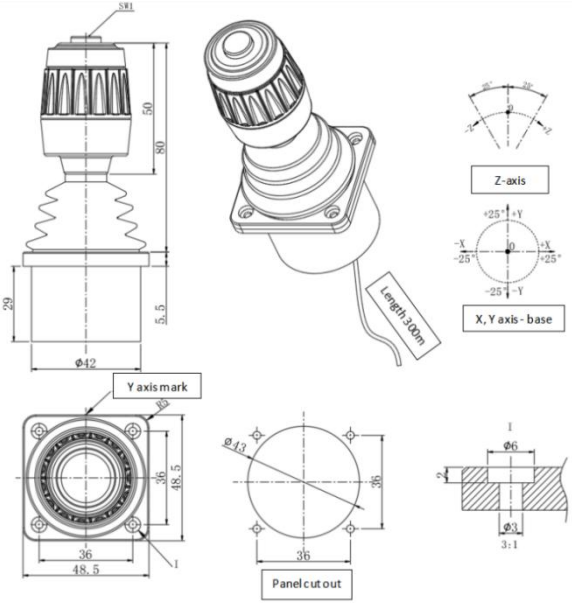

MKF-PJS05 Potentiometer joystick, Multi Axis

- Dual-axis finger operated, spring return
- Spring return
- With center tap potentiometer angle detection
- 2mA (max) current directional switch
- Proportional amplifier to direct drive hydraulic proportional valve optional

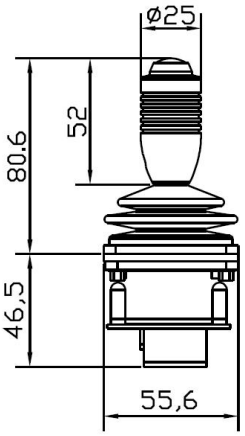

H handle

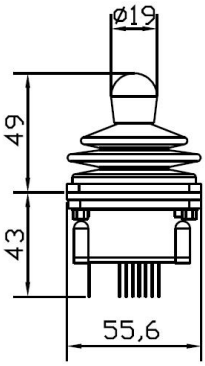

S handle

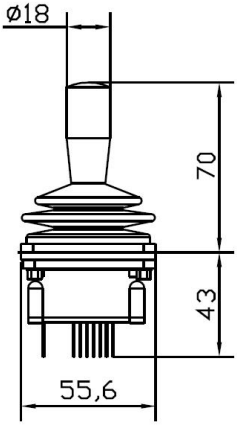

L handle

MKF-PJS01 Hall / Potentiometer, Single/Dual Axis Joystick

- Single-axis forward and backward directional or single directional operated
- Friction lock or spring return
- Center and start (end) position mechanical lock optional
- Hall and potentiometer is optional
- Microswitch optional (maximum 10A@30Vdc)
- A variety of handle models can be configured
- Potentiometer: 2KΩ, 5KΩ, 10KΩ optional

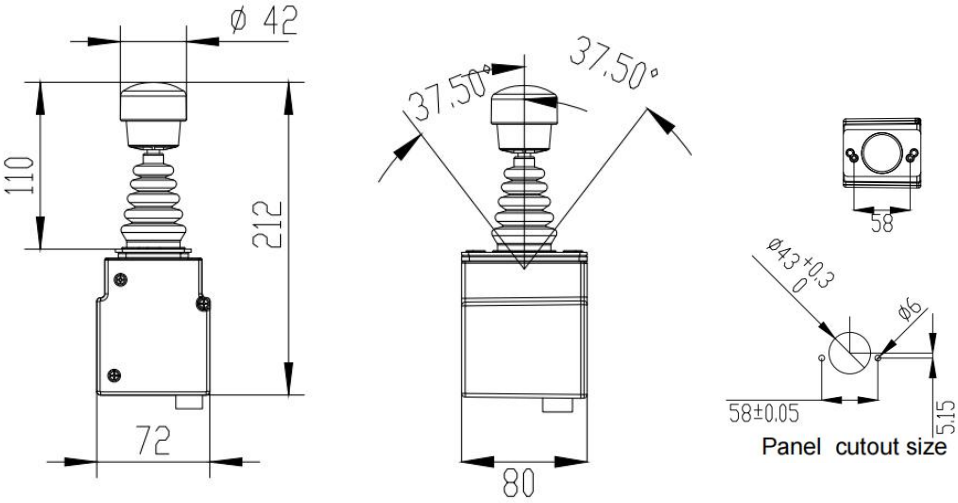

MKF-PJS02 Hall / Potentiometer, Single/Dual Axis

- Spring return,single-axis or dual-axis operated
- Cross direction or arbitrary direction operated optional
- Potentiometer or hall effect angle detection, long life
- Large current microswitch optional (10A@30Vdc)
- Various output optional
- Various handle optional

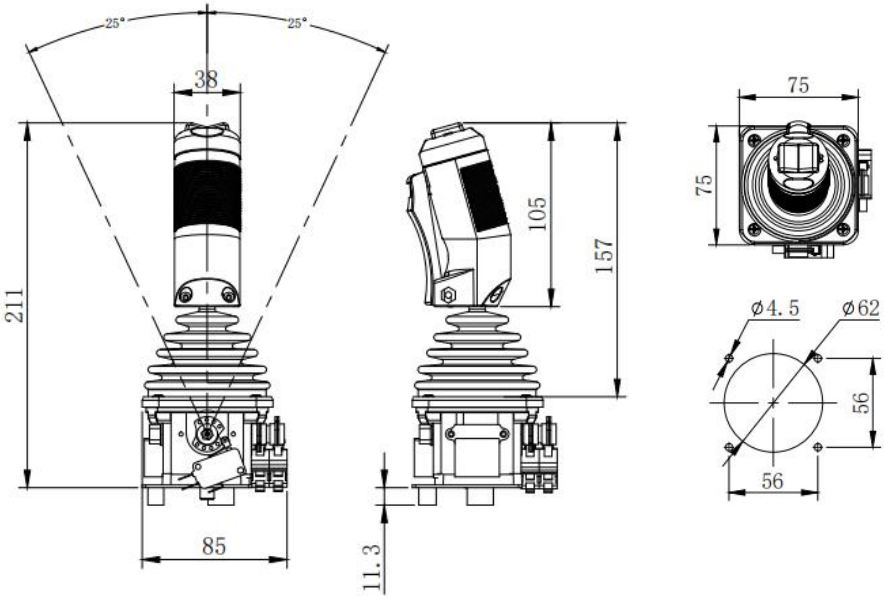

MKF-PJS03 Hall / Potentiometer, Single Axis

- Rugged components designed for the construction environment
- Potentiometer tracks for angular-detecting
- Friction held and spring return for choice
- Center-lock is a mechanical option
- Providing optional grips with different shapes
- The number and position of the switches are customized designed
- PWM output drives proportional solenoid valve
- Depending on the proportional solenoid valve to set starting current, maximum current and PWM frequency
- CAN output is an option

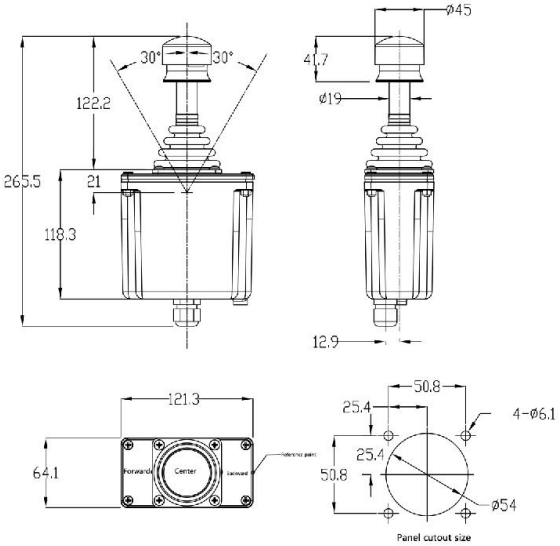

MKF-PJS04 Hall / Potentiometer joystick, Multi Axis

- Ergonomics design on mobile application.
- Contactless hall effect and long expect-life potentiometer optional.
- Various handle, different number and location of button.
- Switches optional.
- CAN bus output optional.

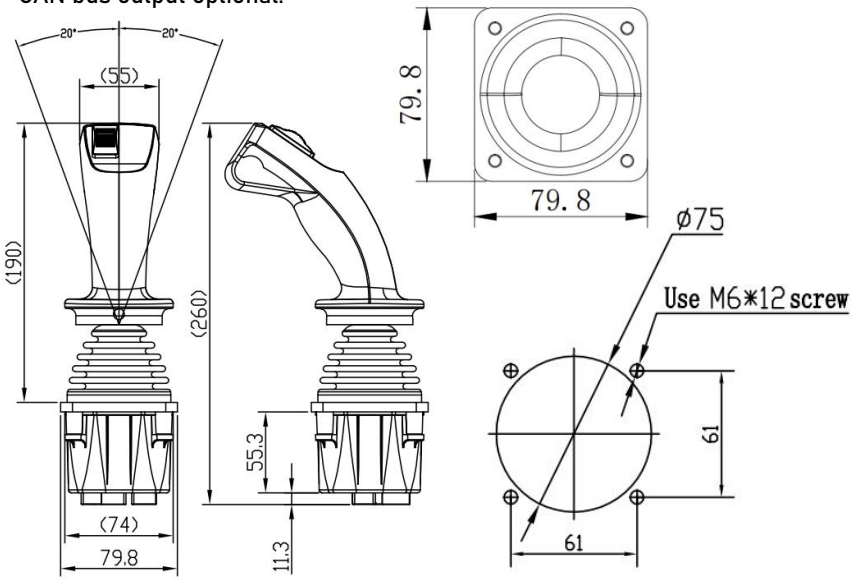

MKF-JS32/H80 SERIES 2-axis Hall joystick

Suitable for aviation/ Ship/ Construction machinery

- Positioning method: spring return
- Button: 1 button
- Operation angle: ±22.5°
- Central gear: independent central mechanical gear
- Power supply: DC5V, 12-28V (optional)
- Signal output: 0-5V/RS232/RS422/ CAN, PWM (0-500mA) proportional valve signal
- Life span: 5 million times; accuracy: less than 0.1%.
- Material: aluminum alloy + stainless steel
- Protection level: IP65 above the panel
- Proportional valve control has acceleration and deceleration speed, curve, maximum current, minimum current setting functions

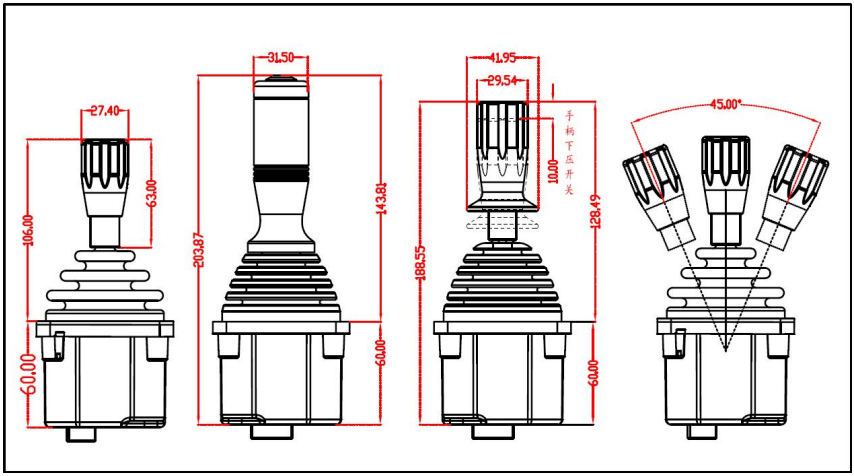

MKF-JS33/H80 SERIES 2-axis Hall joystick, w/ push-down switch

- Positioning method: spring automatic reset
- Operation angle: ±22.5°
- Power supply: DC5V, 12-28V (optional)
- Signal output: 0-5V/RS232/RS422/CAN/USB/PWM (0-500mA) proportional valve signal
- Life span: 5 million times
- Repeat accuracy: less than 1%
- Material: plastic, aluminum alloy, stainless steel
- Protection level: IP65 above the panel

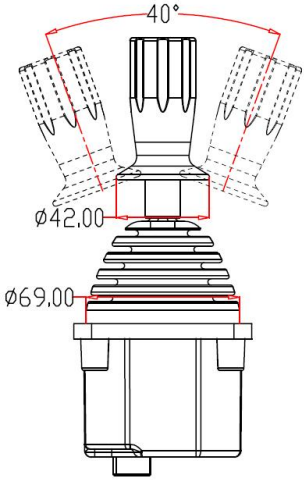

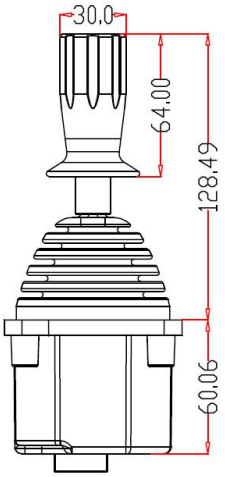

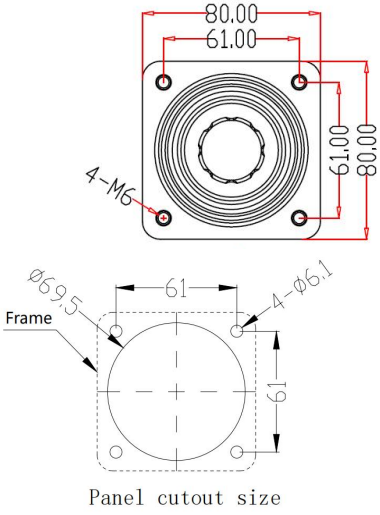

Panel cutout size

MKF-JS34/H80 SERIES 3-axis Hall joystick

Suitable for aviation and ships

- XY axis positioning: automatic spring reset
- Z axis positioning: friction resistance positioning
- Operation angle: XY axis ±22.5°, Z axis ±135°
- Central gear: obvious manipulator feel in the center of Z axis
- Power supply: DC5V, 12-24V (optional)
- Signal output: 0-5V, USB, RS232, RS422, CAN
- PWM (0-500mA) proportional valve signal
- Life: 5 million times; accuracy: less than 0.1%.
- Material: aluminum alloy + stainless steel
- Protection level: IP65 above the panel

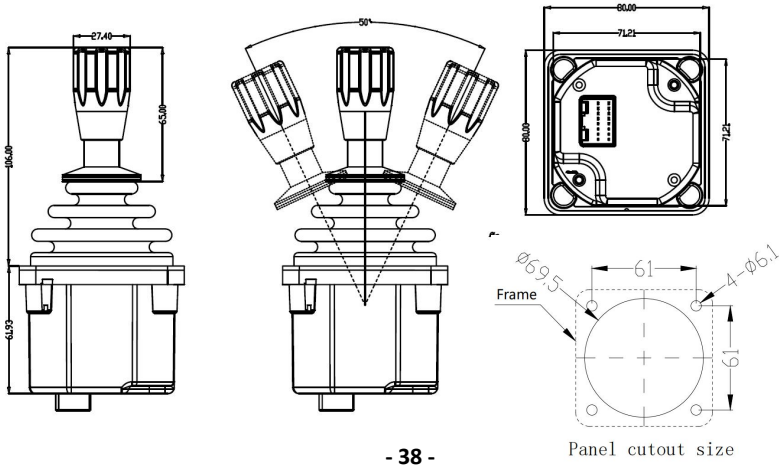

Panel cutout size

MKF-JS05/H80 SERIES series

- Multi- axis Hall sensor joystick
- Button: 2～6 buttons + trigger switch
- Trigger switch, thumb wheel
- Button color: red/green/blue/yellow/black
- Direction switch: 4 direction switches
- Positioning method: spring automatic reset
- Operation angle: ±22.5°
- Power supply: DC5V, 12-24V (optional)
- Signal output: single sensor or double sensor (cross)
  /Analog voltage 0-5V/0.5-4.5V/0.3-4.7V@middle position 2.5V
  /Analog voltage signal, linear V-curve + direction switch
  /Analog voltage signal, V-shaped curve (low middle position) + direction switch
  /RS232/RS422/RS485/CANOPEN/CAN J1939/USB(HID2.0)
  /Modbus master or slave
- Life: more than 5 million times
- Repeat accuracy: less than 0.8%.
- Material: plastic, aluminum alloy, stainless steel
- Protection level: IP65 above the panel
- Working temperature: -40℃~+75℃
- Proportional valve control has acceleration and deceleration, curve, maximum current, minimum current setting functions

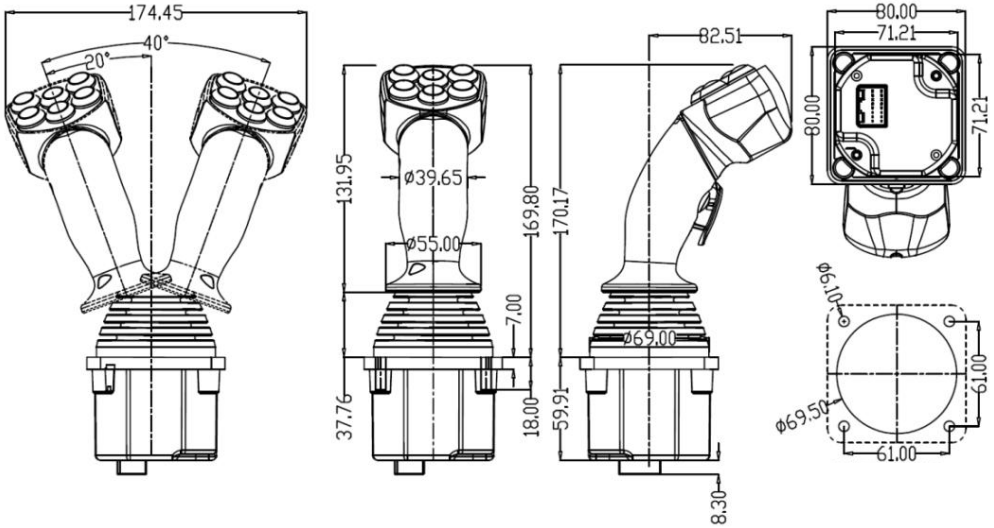

MKF-JS35/H71 SERIES

Used in heavy machinery, hydraulic equipment, electric vehicle control

- Positioning method: spring automatic reset/friction brake
- Mechanical gear position: feel of mechanical gear position (positioning with limited resistance)
- Sensor: Hall sensor
- Direction switch: 2 * 2A/12V operating angle: ±34°, total angle 68°
- Power supply: DC5V/12-29V
- Signal output: voltage 0-5V, USB, CAN PWM (0-500mA) proportional valve signal
- Life: 5 million times; accuracy: less than 0.8%.
- Material: aluminum alloy, stainless steel
- Protection level: IP65 above the panel
- Proportional valve control has acceleration and deceleration speed, curve, maximum current, minimum current setting functions

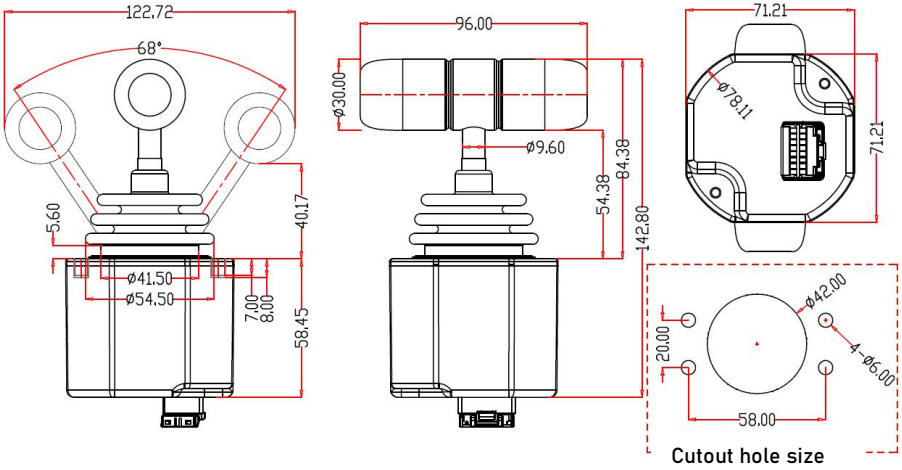

MKF-JS40 series drone joystick

- Handle material: aluminum-magnesium alloy
- Return mode: the spring automatically returns to the neutral position
- Configuration parameters: 6 waterproof button switches
- 1 * trigger switch with 2 strokes
- 1 * 2-way self-reset switch
- 1 * cross thumb Hall rocker
- Signal output: 0.5-4.5V/RS422/232/CAN/USB/ switch
- Life span: more than 5 million times
- Power supply DC5V or DC9-36V

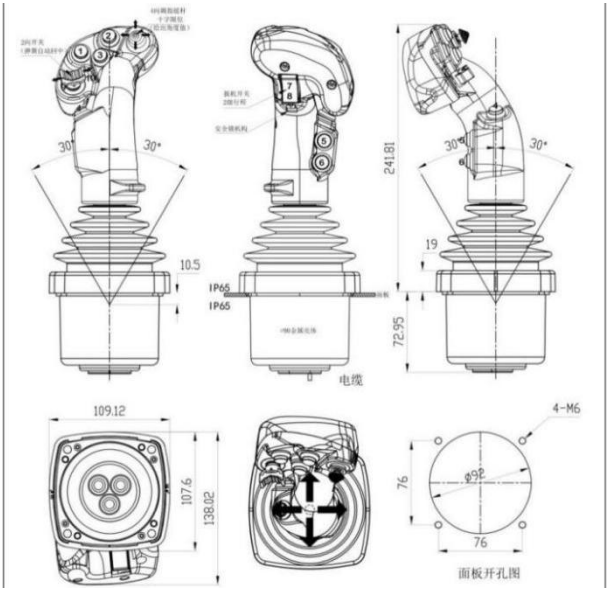

MKF-JS11 (Right handle)

- Multi-axis friction positioning or a combination of spring return and friction positioning
- Various operation ranges such as straight / cross / square / T-shape / H-shape, etc.
- Signal output: 0.5-4.5V, RS422, RS232, CAN, USB, switch, etc.
- IP65 protection; temperature: -40 degrees to +70 degrees
- Power supply: DC5V or DC9-36V

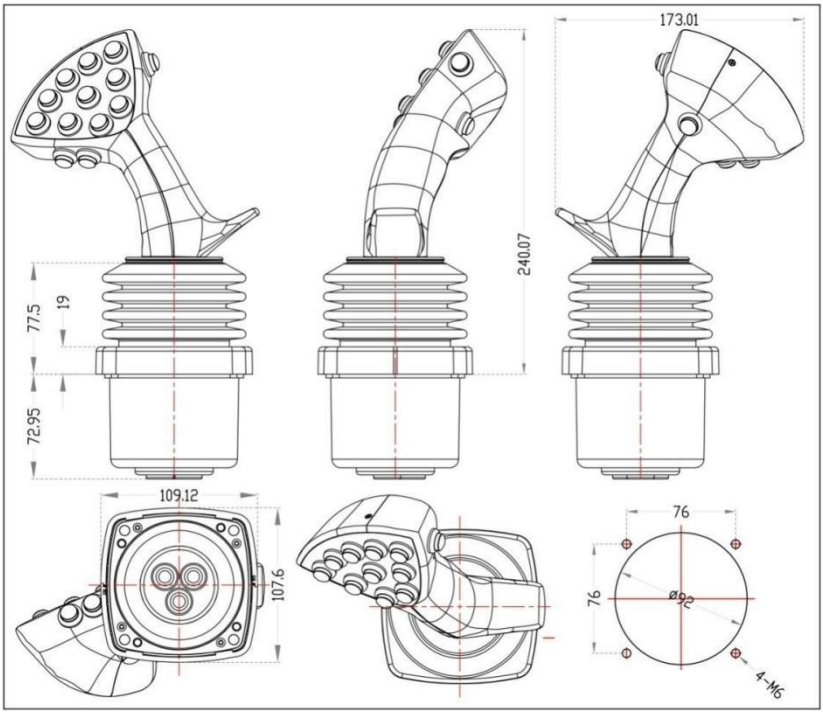

MKF-JS12 (Both left and right handles)

- The same feel as the hydraulic control; spring returns to the neutral position
- Various operation ranges such as straight / cross / square / T-shape / H-shape, etc.
- Signal output: 0.5-4.5V, RS422, RS232, CAN, USB, switch, etc.
- IP65 protection; temperature: -40 degrees to +70 degrees
- Power supply: DC5V or DC9-36V

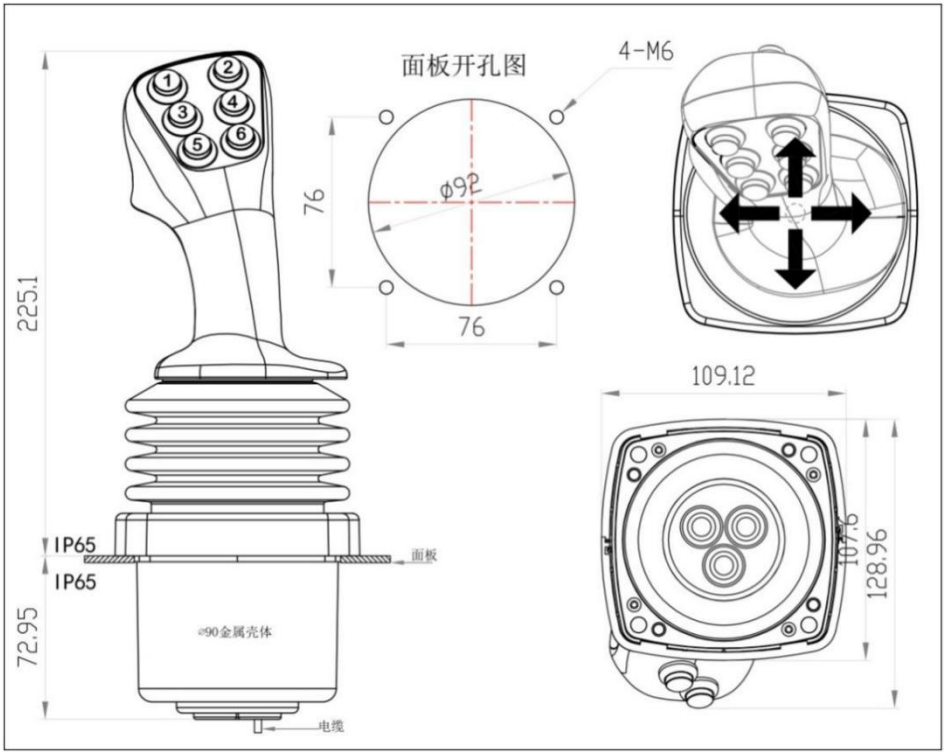

MKF-JS13 (Both left and right handles)

- The same as the hydraulic control feel; the spring returns to the neutral position; straight / cross / square / T-shape / H-shape, etc operation limiter.
- signal output: analogue voltage (0.5-4.5V), RS422, RS232, CAN etc.
- IP65 protection; temperature: -40 degrees to +70 degrees; lifespan: more than 5 million times; Power supply DC5V or DC9-36V.

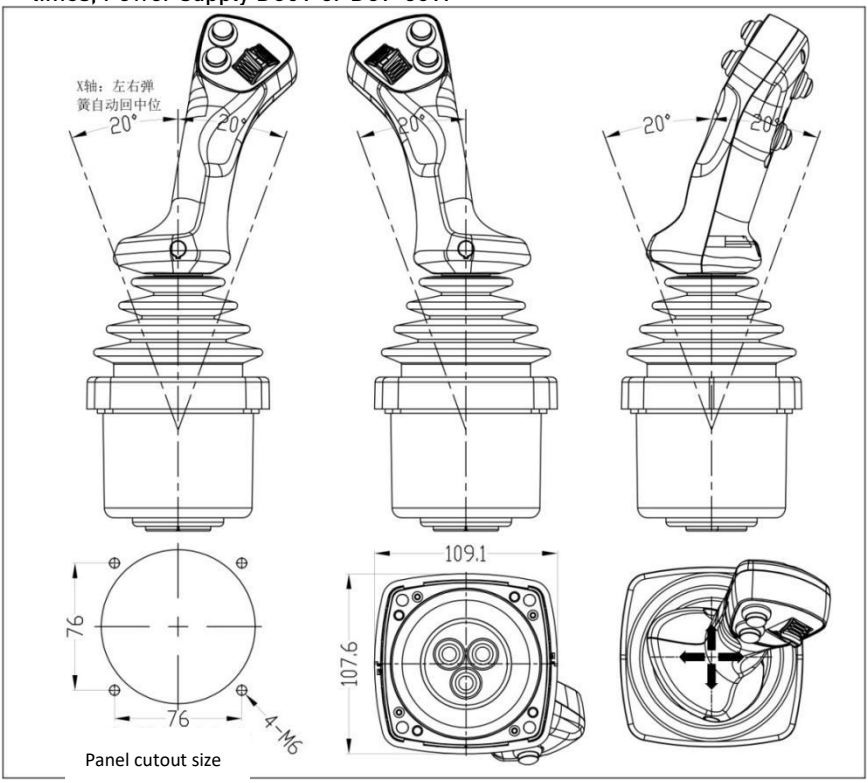

Panel cutout size

MKF-JS14

- Same as the hydraulic control feel
- Multi-axis: XY axis, XYZ axis, Z axis handle ±30 degree rotation (optional)
- Hall sensor; with vibration feedback
- Any combination of spring return and friction positioning
- Straight/cross/square/T-shaped/Z-shaped limit
- Signal output (0.5-4.5V, RS422, RS232, CAN, USB, switch, etc.)
- IP65 protection; temperature: -40 degrees to +70 degrees
- Life span: more than 5 million times

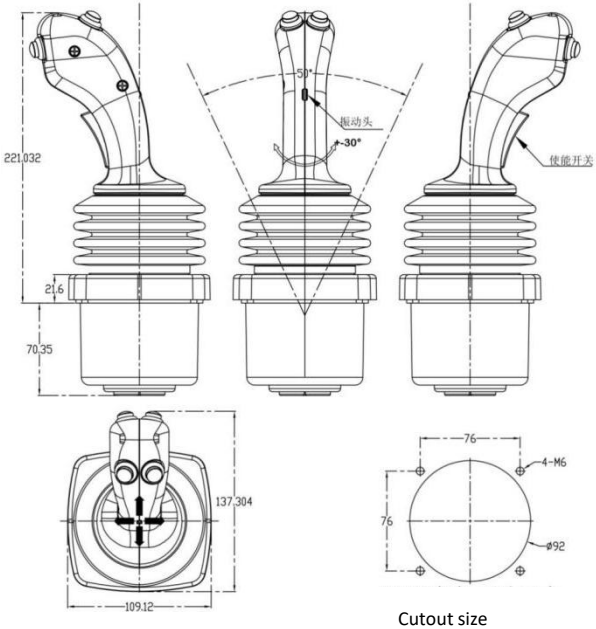

Cutout size

MKF-JS36

- Front/rear throttles, left/right gears
- Hall sensor
- With vibration feedback
- Y-axis friction positioning, the middle position has gear vibration feeling
- X axis: left D gear (spring return to center) middle N, right P gear
- Multiple signal output (0.5-4.5V, RS422, RS232, CAN, and switch combination, etc.)
- IP65 protection; temperature: -40 degrees to +70 degrees
- 1 enable switch, multiple waterproof button switches
- Lifespan: more than 5 million times; power supply is DC5V or DC9-36V

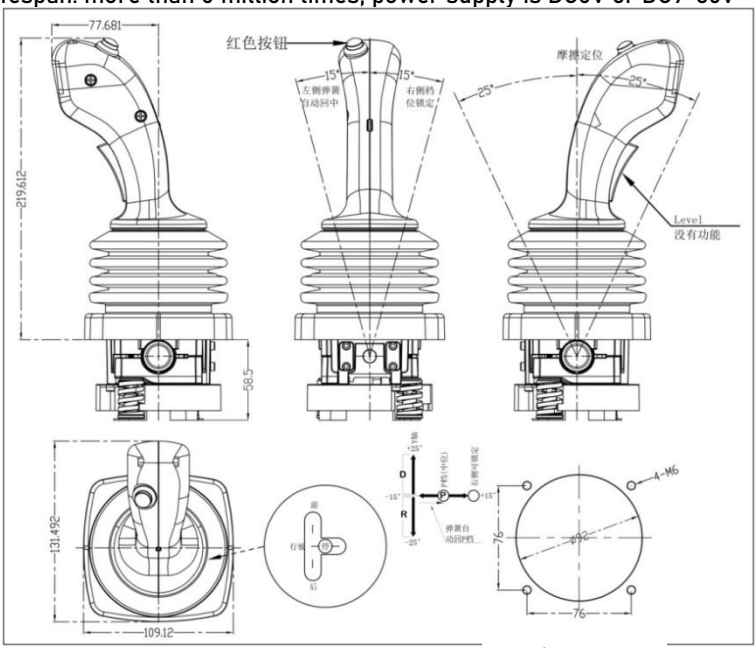

Panel cutout size

MKF-JS93

- Handle can be chose: 1 button on the top/2-way reset switch/3 position switch
- 1-2 axis, spring return, friction hold
- Straight/cross/square/T shape/H shape operation limiter optional
- Power supply: DC 5V or DC9-36V

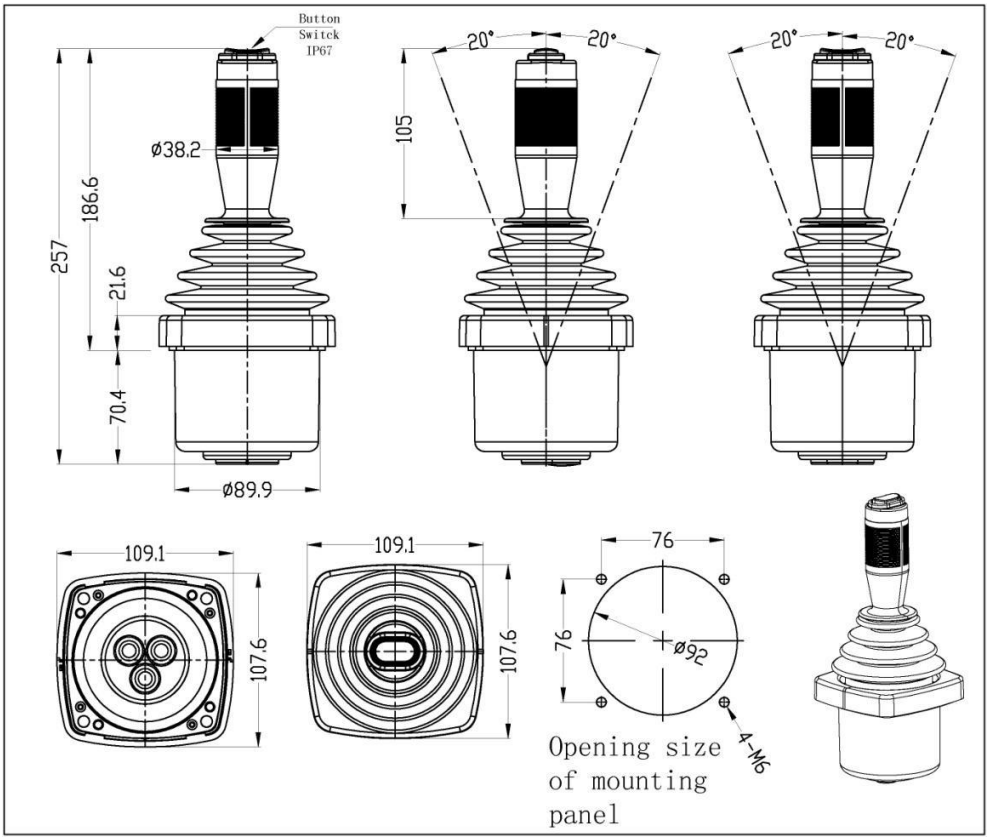

MKF-JS21 (Both left and right handles)

Used in road roller and bulldozer control.

- Front and rear throttle, left and right gear
- Y-axis friction positioning, the middle position has gear vibration feeling
- X axis: left D gear (spring return to center), Middle N gear, right P gear
- Signal output 0.5-4.5V, RS422, RS232, CAN, etc.

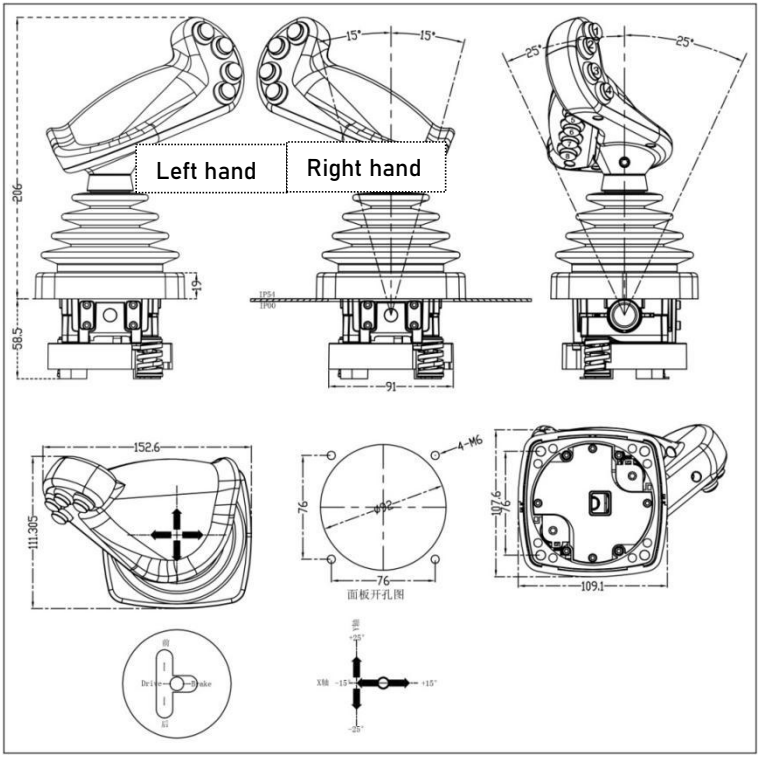

MKF-JS37 (Right handle)

Used in agricultural machinery, port machinery.

- The spring automatically returns to the neutral position
- Operation range of straight limit, cross limit, square limit, etc.
- Signal output: 0.5-4.5V, RS422, RS232, CAN
- IP65 protection; temperature: -40 degrees to +70 degrees
- Power supply: DC5V or DC9-36V

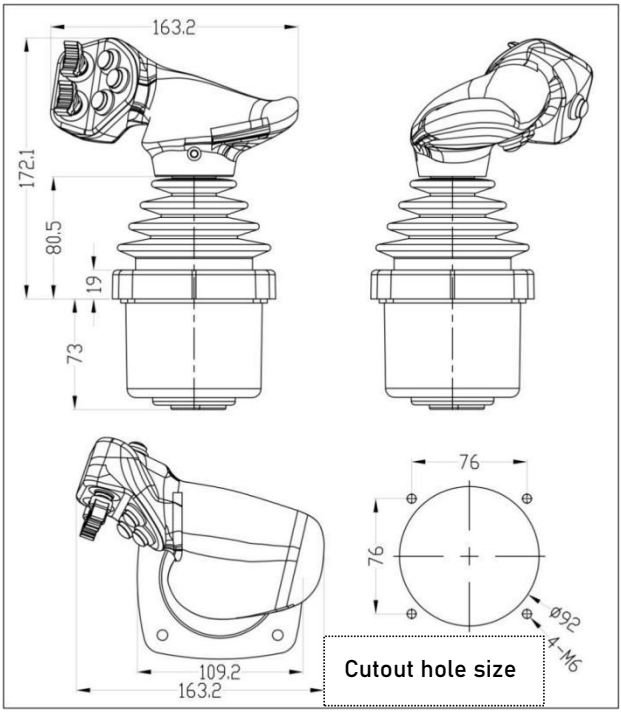

MKF-JS53

Mate Industrial Joystick, Hall sensor, multi Axis, Panel Mounted

- Spring return, single-axis or dual-axis operated
- Cross direction or arbitrary direction operated optional
- Hall effect angle detection, long life
- Various output optional

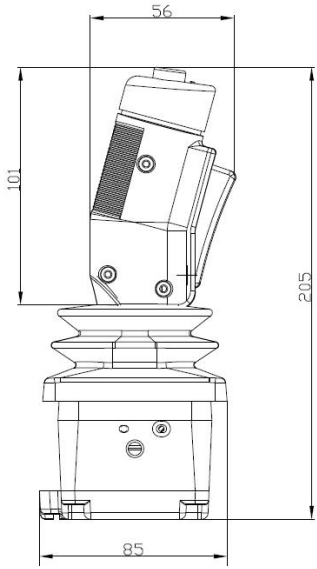

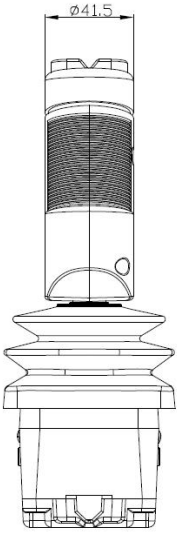

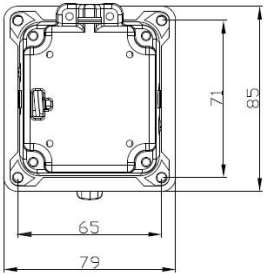

MKF-JS55

Mate Industrial Joystick, Hall effect, 2 axis, Panel Mounted

MKF-JS55 is a 2 axis Hall-type industrial joystick, instrument panel installation method, stainless steel and aluminum alloy materials, spring automatic return structure, German high-precision Hall-type sensor, full temperature range linear correction, IP65 protection level, smoother operation Feel, ergonomic mechanical design. reliable for long life span usage. This joystick is specially designed for rotary excavator and other heavy-duty or safety-critical applications.

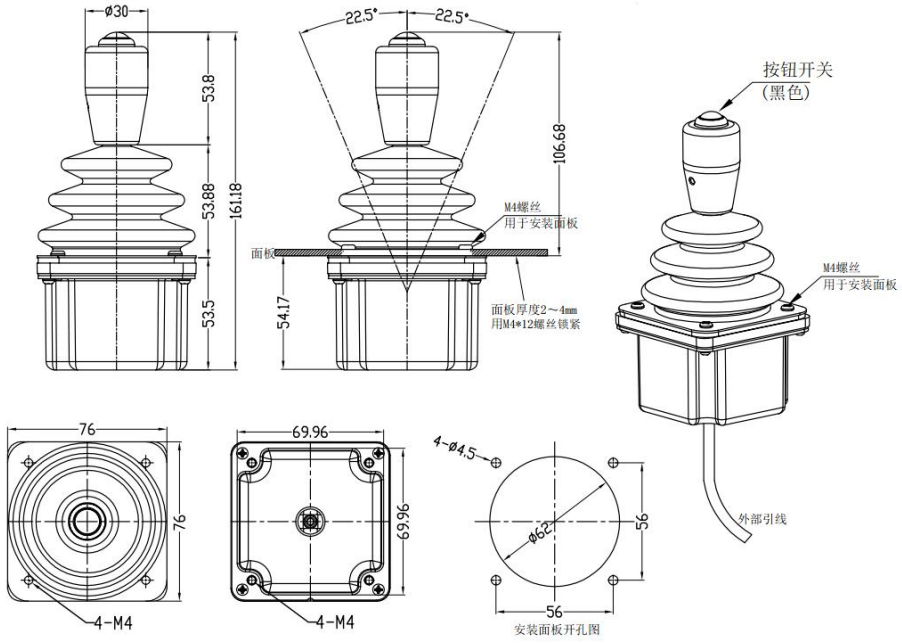

MKF-QT01 series

QT01 series controller type crane console is mainly used in AC 50HZ(60HZ),rated voltage 380V(440V) in the following secondary circuits , realize motor commutation, speed regulation, braking, linkage, and transfer operate control etc. Qt01 rotary crane console is ergonomically designed with excellent and comfort operation feeling. The equipment box is made of steel sheet, standard deploy hinged cover with locking function. It is also easy to maintain. The joystick indicator and control unit are arranged according to customer specifications.combined with the available customized dimension and shaped equipment boxes.

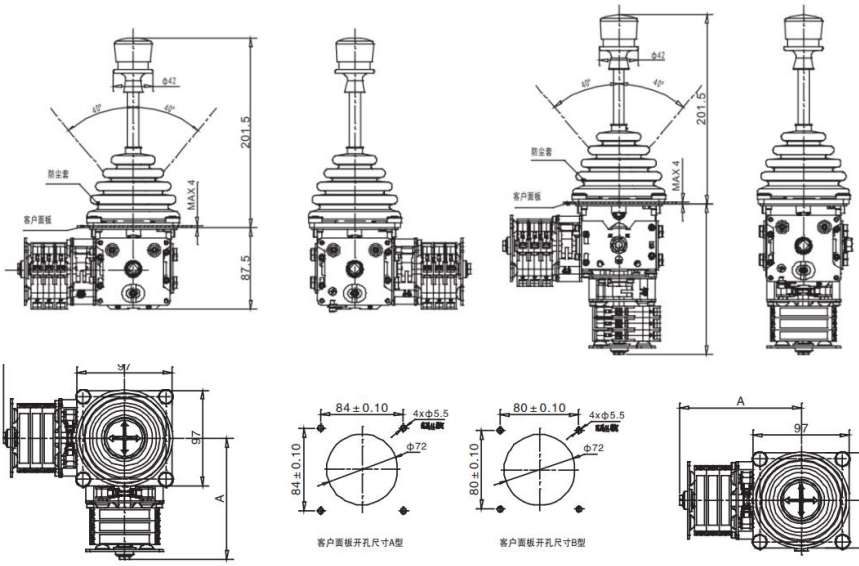

Main and auxiliary hook

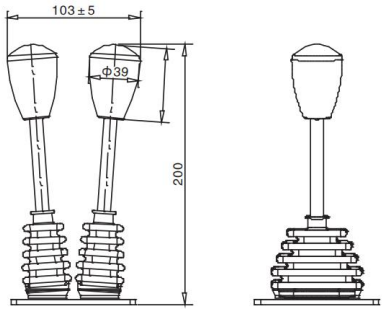

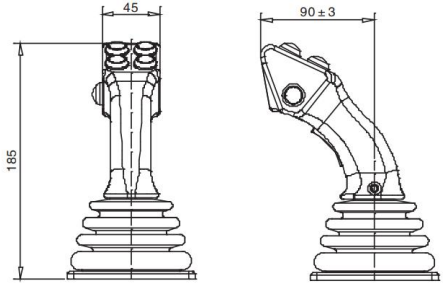

Grab

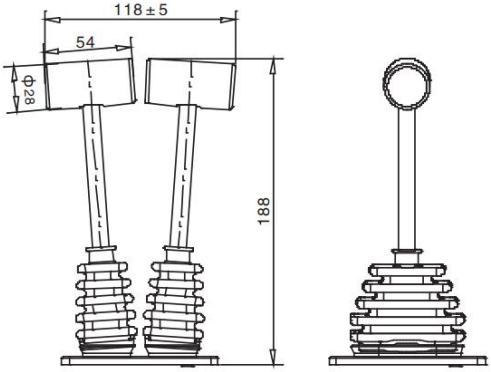

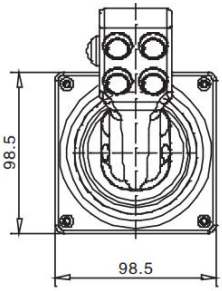

Contacts	Size A	Size B
2	98	135
4	110.5	147.5
6	123	160
8	135.5	172.5
10	148	185
12	160.5	197.5

MKF-FS01 Force sensor joystick

MKF-FS01 is made of aviation aluminum alloy, which has good environmental adaptability and strong experimentation. Safe and reliable. With an ergonomic design, the handle is installed with momentary push buttons, one trigger switch and one force sensor joystick. Mainly used in construction machinery, aerospace equipment. The protection level can reach IP65, the handle can be equipped with various types of switches, and the sensor can achieve the implementation of related functions.

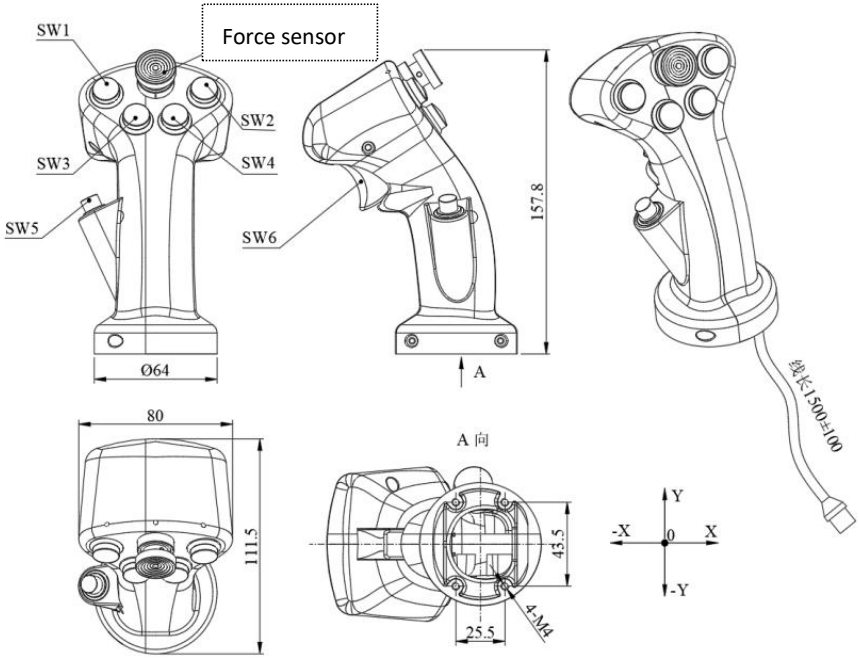

MKF-JS89

Mate Industrial Joystick, Hall effect, multi axis, Panel Mounted

MKF-JS89 is a multi axis Hall-type industrial joystick, instrument panel installation method, stainless steel and aluminum alloy materials, spring automatic return structure, German high-precision Hall-type sensor, full temperature range linear correction, IP65 protection level, smoother operation Feel, ergonomic mechanical design. reliable for long life span usage. This joystick is widely used in TV camera, CCTV, industrial robot, medical equipment, optical instrument, heavy-duty and safety-critical applications.

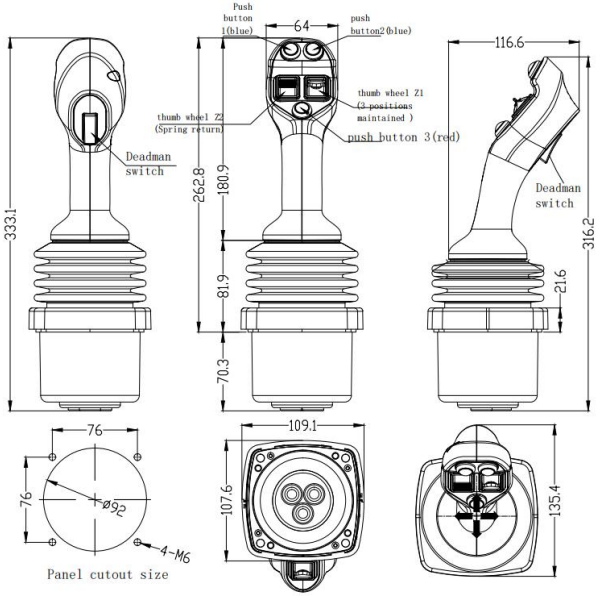

MKF-JS60

Mate Industrial Joystick, Hall effect, multi axis, Panel Mounted

MKF-JS60 is a multi axis Hall-type industrial joystick, instrument panel installation method, stainless steel and aluminum alloy materials, spring automatic return structure, German high-precision Hall-type sensor, full temperature range linear correction, IP67 protection level, smoother operation Feel, ergonomic mechanical design. Reliable for long life span usage. This joystick is widely used for controllable equipment: port machinery,crane, aerial work vehicle, grader, engineering equipment armrest box, electronically controlled cab, etc.

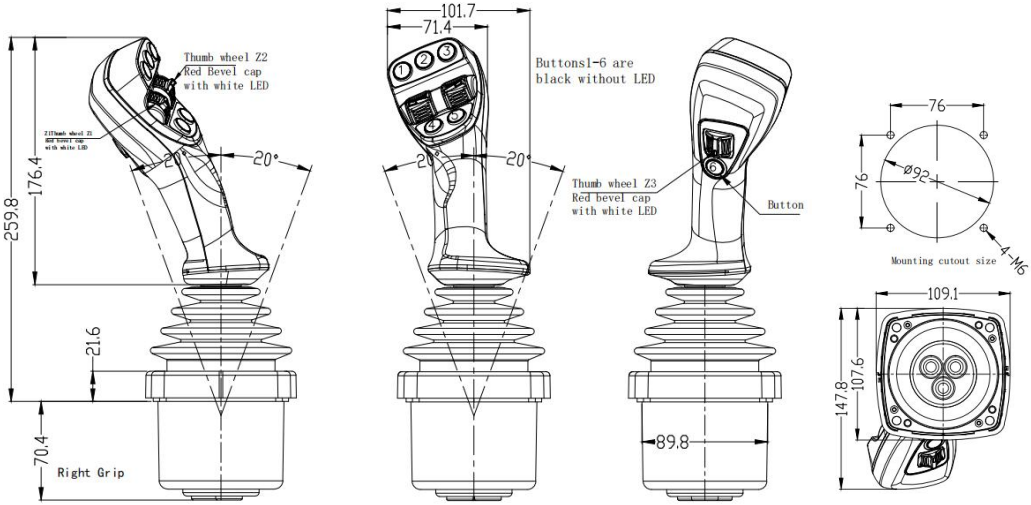

MKF-JS63

Mate Industrial Joystick, Hall effect, multi axis, for armrest box

- Buttons: 4 backlit buttons + 1 thumb wheel (with backlight)
- Number of axes: 2 axes, spring automatically returns to the center
- Gear position: no mechanical gear / edge belt gear optional
- Operating range: square, others can be customized
- Operating angle: ±20°
- Signal output: 0.5-2.5-4.5V
- Power supply: DC5V

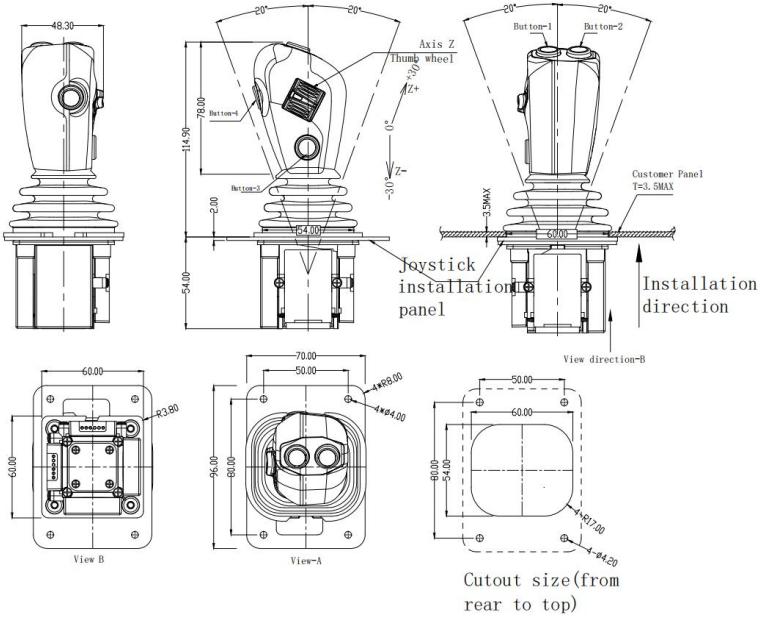

MKF-JS15

Friction resistance positioning, Dedicated for unmanned boats, anti-salt fog

3 axis with button

3 axis without button

- Stainless steel structure, panel IP65 protection, anti-salt spray, sensor and circuit waterproof design;
- 1 axis, 2 axis, 3 axis, friction resistance positioning, the center mechanical gear position of each axis, the gear position feels obviously
- High-precision Hall sensor, linear correction in the whole temperature range, Smooth operation feel
- Multiple signal output options
- Waterproof button design
- Applicable to the control of unmanned ships, unmanned boats, ships, etc.
- Suitable for ship hydraulic control and other fields
- Operation angle: ±30 degrees
- Signal output: 0.3-4.7V, RS232, RS422, CAN
- Power supply: DC5V/DC12V/DC24V

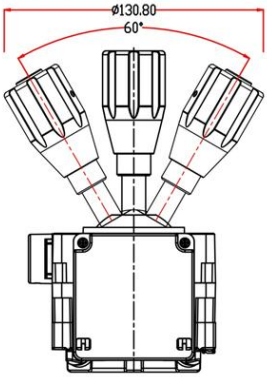

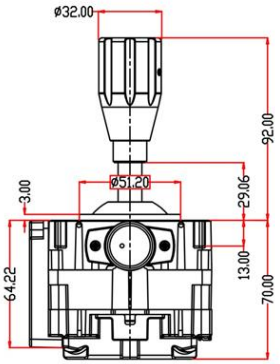

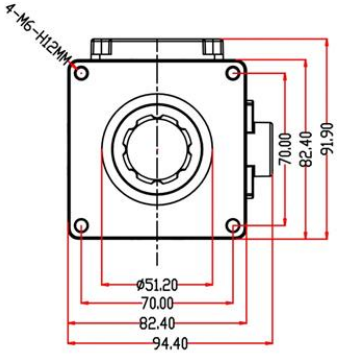

MKF-JS70

Special joystick for unmanned boat,Friction resistance positioning

- 3-axis, friction resistance positioning, smooth operation feel
- The center mechanical gear, the gear feels obvious;
- High precision hall sensor
- Operating angle: ±30 degrees
- Signal output: 0.3-2.5-4.5V
- Power supply: DC5V
- Protection: IP67 above the panel
- Suitable for control of unmanned ships, unmanned boats, ships, etc.;

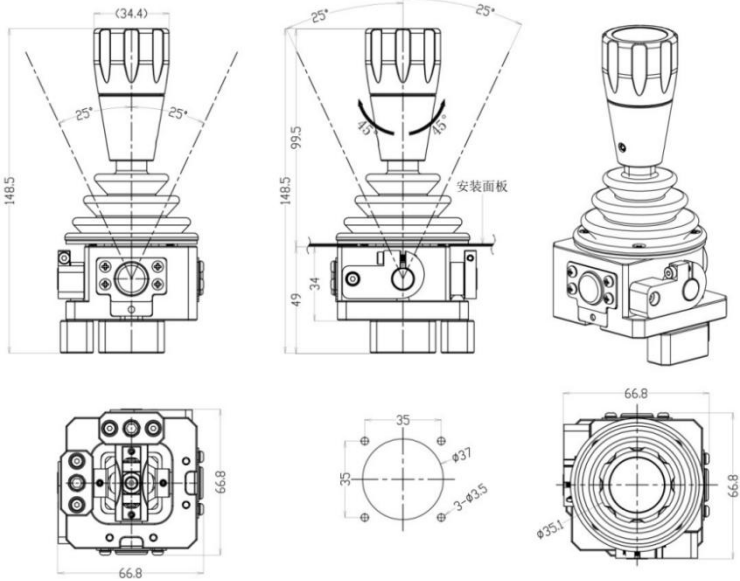

MKF-JS71

Ship azimuth engine controller

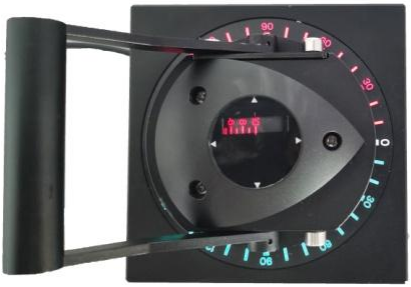

- Full-turn propeller control, with propeller angle and speed control functions, suitable for large-scale ship control.
- Multiple signal output: analog voltage signal 0.5-4.5V; analog current signal 4-20mA.
- Horizontal angle: 360 degrees continuous
- Vertical angle: 0-75°/or ±60°

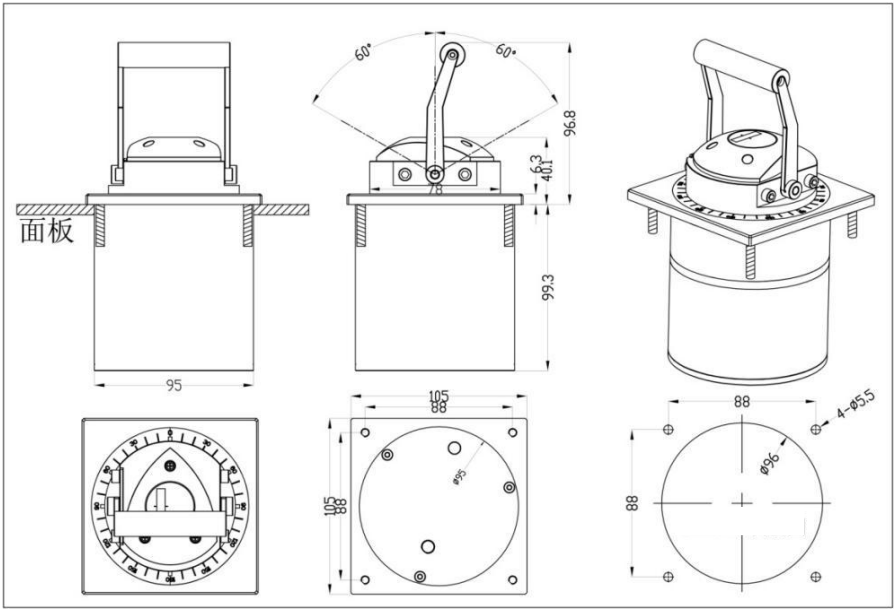

MKF-JS16 Engine controller

MKF-JS16 dual engine throttle controller. Suitable for ship engine throttle control, can control 2 engines, with throttle control and gear control functions. With CAN communication indication, synchronization indication, error indication function. Adopt dual-channel Hall sensor, full temperature range linear compensation, stainless steel shell, waterproof and salt spray design, friction resistance positioning, 3 mechanical gears (DNR).

- Sensor: Double Hall sensor
- Operation angle: 156 degrees
- Center gear: 3 gears (DNR)
- Power supply: DC5V/DC12V/DC24V
- Operating temperature: -40℃～+70℃
- Lifespan: more than 5 million times
- Signal output: analog voltage 0-5V, CAN, RS485
- Protection: IP67

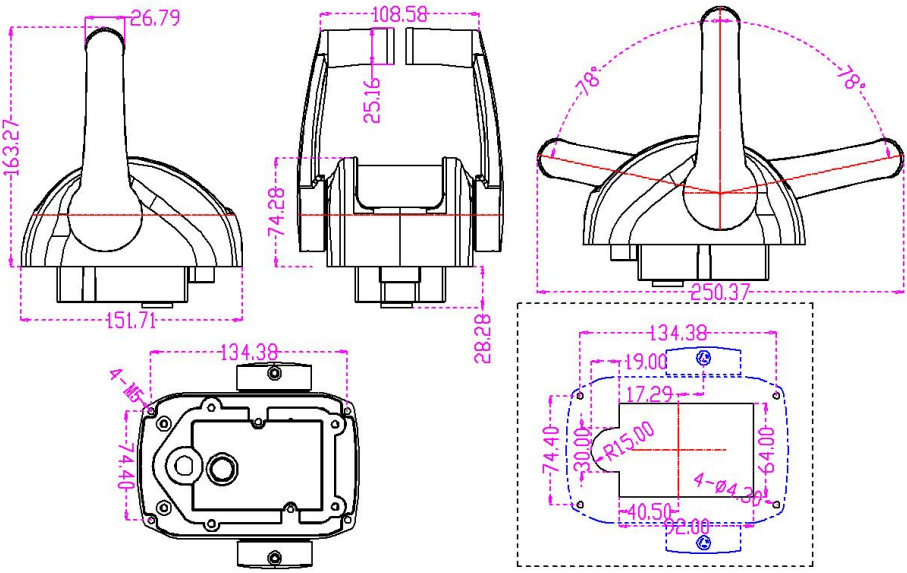

MKF-JS38 Single engine throttle controller

MKF-JS38 single engine throttle controller. Suitable for ship engine throttle control, gear control, etc. There are gear indicator lights and signal indicator lights. It adopts Hall sensor, full temperature range linear compensation, stainless steel shell, waterproof and salt spray design, friction resistance positioning, 3 mechanical gears (DNR).

- Sensor: Double Hall sensor
- Operation angle: 156 degrees
- Center gear: 3 gears (DNR)
- Life span: more than 5 million times
- Power supply: DC5V/DC12V/DC24V
- Signal output: analog voltage 0-5V, CAN, RS485, 0-20MA
- Operating temperature: -40℃～+70℃
- Protection: IP67

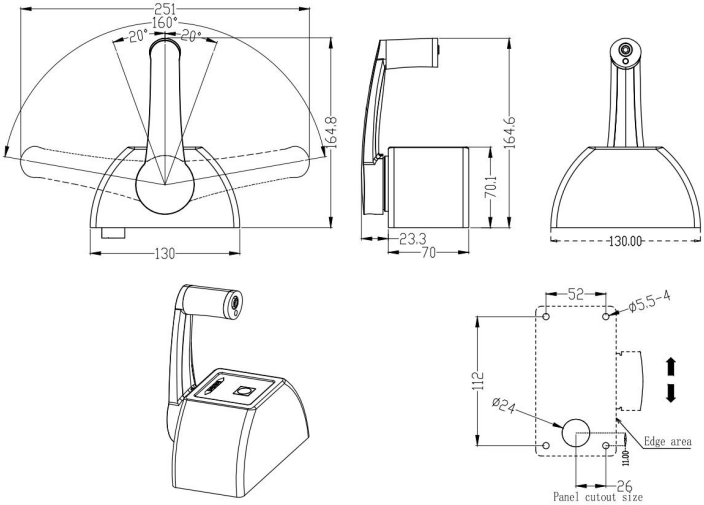

MKF-JS17 Rudder

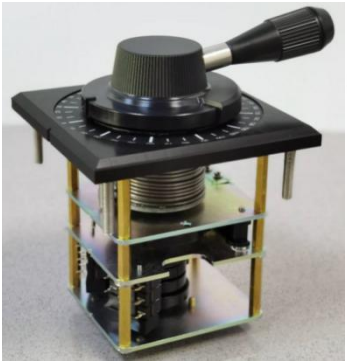

- Signal output: multiple groups of switching signals + voltage signal 0.5-2.5-4.5V
- Positioning: The friction resistance positioning and the spring automatic return to the center position (optional)
- Angle: ±40°, ±60°, ±80°, 100°, 120° or continuous rotation optional
- Hand feeling: gear position feeling (22.5°/gear), smooth damping (medium gear)
- Power supply: DC5V
- Life span: 5 million times
- Operating temperature: -40℃～+70℃

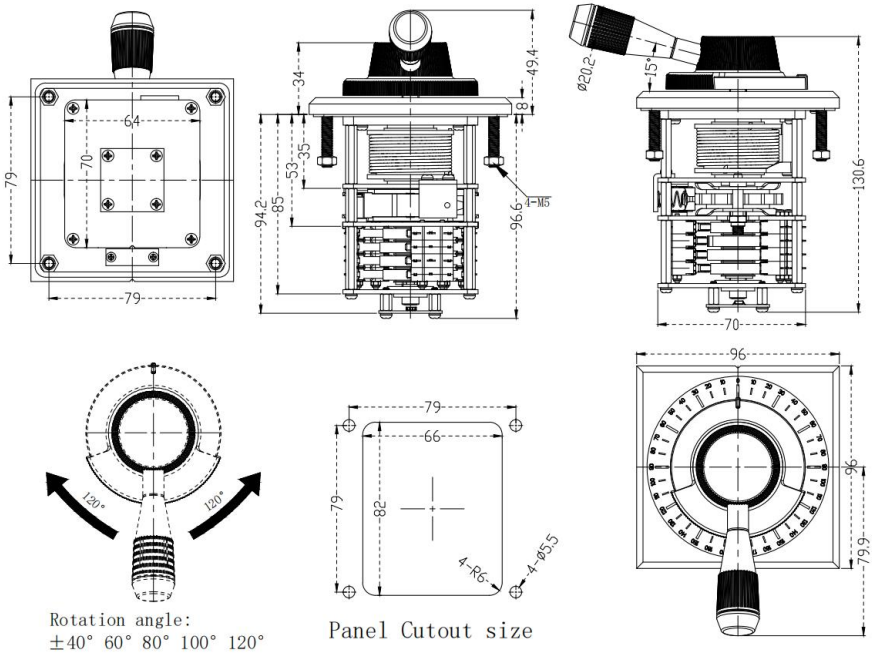

MKF-JS62 Engine throttle controller

This is a dual engine controller/lever. Suitable for throttle control of twin-engine yachts, can control 2 engines, with throttle control, gear control functions. There are 3 mechanical gears DNR, synchronous indication. With Hall sensor, full temperature range linear compensation, 2 engines full electrical isolation technology, bus signal output and engine electronic throttle signal output, waterproof and anti-salt spray treatment, with good operating feel.

- Sensor: Hall sensor
- Operating angle: 150 degrees
- Gear: 3 files (DNR)
- Lifetime: more than 5 million times;
- Signal output: CAN/RS485/diesel engine electronic throttle signal/electric isolation of left and right engine throttle signals
- Power supply: DC24V (10-36V)
- Power consumption: 30mA/@DC24V (no load)
- Operating temperature: -40℃～+70℃
- Protection: IP67

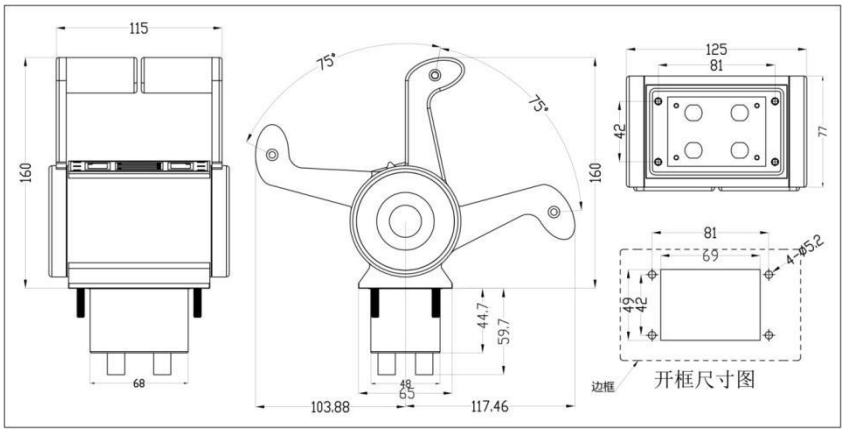

MKF-MJS-85

Mate Industrial Jovstick mouse. Hall effect, Two axis, Desk Top Version

MKF-MJS-85 is a Hall effect, desktop joystick mouse, robust design with main materials - aluminum case, engineering plastic. Two axis, with spring automatic return. High-precision Hall sensor, linear correction in the whole temperature range. Smooth operating experiences. Ergonomic mechanical design. With 3 mouse buttons button for left, right clicking and scrolling key in the middle. Top button can be used for left clicking. USB interface,plug and play. Suitable for medical equipment,etc that needs waterproof, rugged and long life span joystick with 3 buttons included.

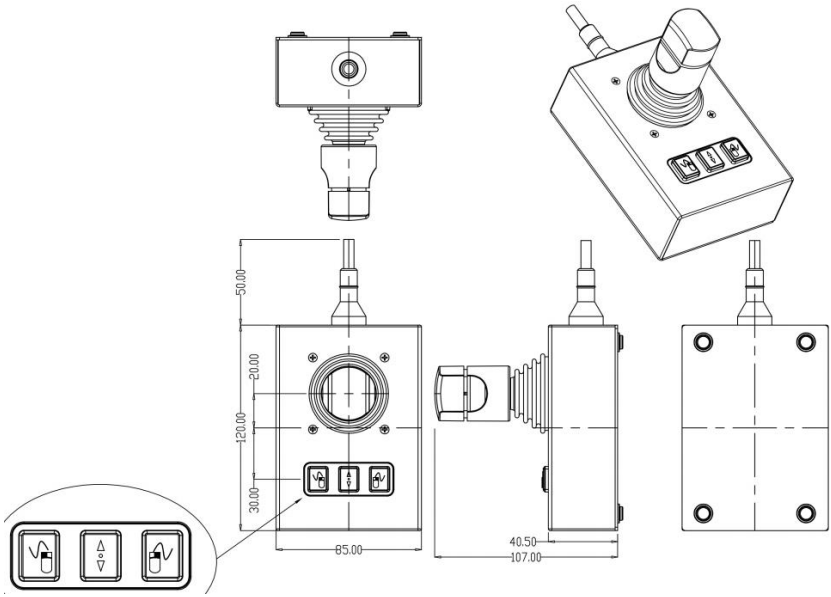

MKF-MJS-52

Mate Industrial Joystick mouse, Hall effect, Three axis, Desk Top Version

The MKF-MJS-52 control box is integrated with a three-axis Hall effect Joystick and 4 button switches. It adopts a high-precision Hall-type sensor. The main materials are aluminum alloy and engineering plastics. The linearity is correct in the whole temperature range. IP65 dynamic waterproof. Smooth operating feel, ergonomic design. USB2.0 output, suitable for industrial equipment, robots, drones, medical equipment, aerospace, ships, radio and television, video surveillance equipment, etc.

- Input voltage: 5Vdc
- Signal output: USB2.0
- Operating life: 1 million times
- Protection class: IP65
- Working temperature: -20℃ - +60℃, storage temperature: -30℃ - +70℃
- Working humidity: 93±3%RH
- Installation dimension: Refer to installation dimension drawing

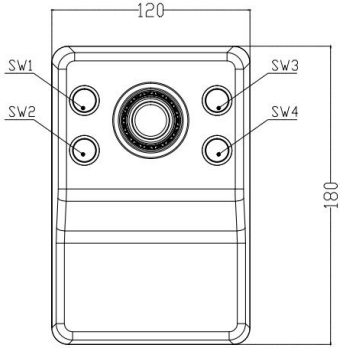

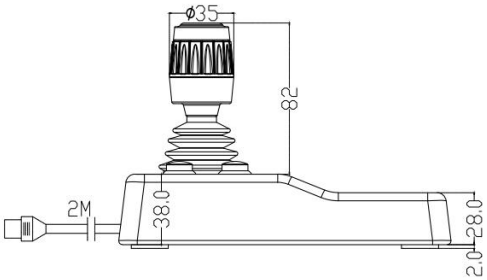

MKF-JS01 Desktop Joystick

- Keys: 8 keys, lifespan of 5 million times
- Indicators: 3 LED indicators
- Interface mode: USB2.0HID, Plug and play
- Other interfaces: RJ45 (RS232+RS485) (Only one interface method can be selected)
- Weight: 0.6kg
- Size: (W)120X(L)157X(H)97
- USB interface products:
- MKF-JS01-USB standard USB joystick, Plug and play
- MKF-JS01-M standard USB, joystick + mouse, Plug and play
- MKF-JS01-L analog voltage interface, 0-5V signal output.

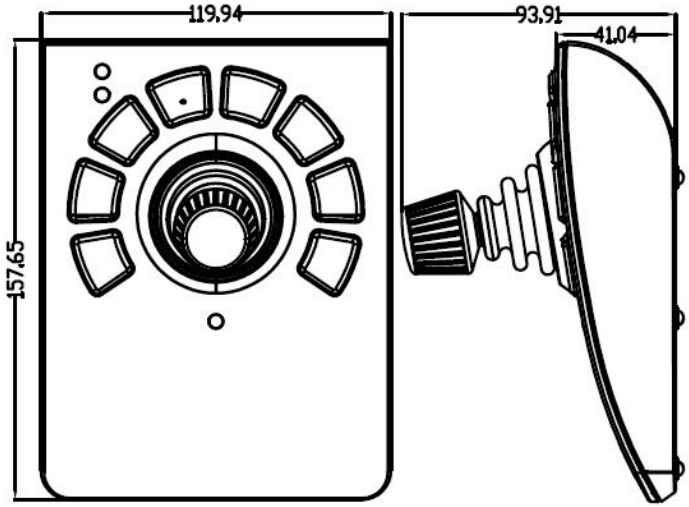

MKF-JS02 Desktop Joystick

- Three-axis Hall joystick
- Buttons: 15 buttons, emergency button, encoder knob
- Display: 4-digit LED
- Power supply: DC5V or DC12V optional
- Weight: 0.6kg
- Size: (W)220X(L)107X(H)55
- Communication interface: CAN, RS232, RS485, USB
- Accessories: 3M long cable

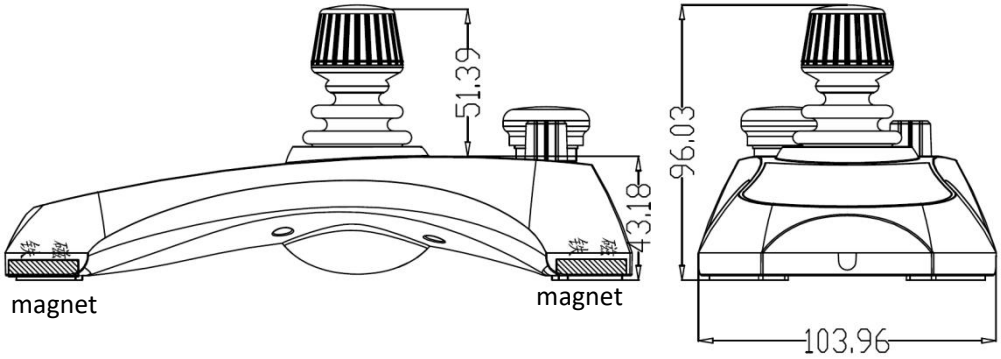

MKF-3-PLC

Mate Wiring diagram of Joystick servo motor control panel

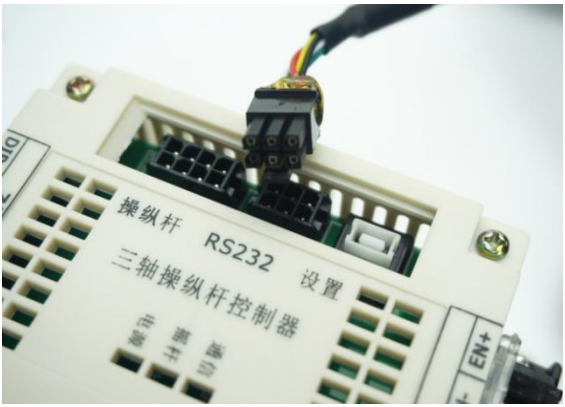

- Can control steeping motor,servo motor
- 3 axis independent control, can control 3 motors at the same time, each axis independent control
- Control the nonlinear speed curve, with accurate control and high speed control performance
- Independent S-shaped acceleration and deceleration control for each axis
- Software inertia configuration with good control
- Each axis independent limit switch (normal open, closed limit), support electronic switch
- Support master computer control(customization,software support required)
- Differential signal output, pulse+ direction

Joystick	3 axes, Hall effect
Control the number of motors	3 motors , simultaneous control, each axis is independent
Motors	Servo motor or stepping motor
Output frequency	0-10KHZ/axis
Output interface	Differential signal output
Control mode	Location mode(Pulse+direction, differential signal)
Power supply	DC8V～DC28V /400MA
Limit switch	Each axis 2pcs (normal open)

MKF-JS61 Desktop Joystick

- Ergonomic design
- It has a strong magnetic adsorption function, which can be directly attached to the surface of the device to prevent it from falling and breaking.
- Integrated with a 3-axis Hall type joystick
- With 12 backlighting buttons, layout can be customized
- With one Emergency stop switch
- With one LED display
- Signal output interface: RS232 / CAN
- Power supply: 10-36V
- Factory default communication mode: CAN/250K/30mS timing sending

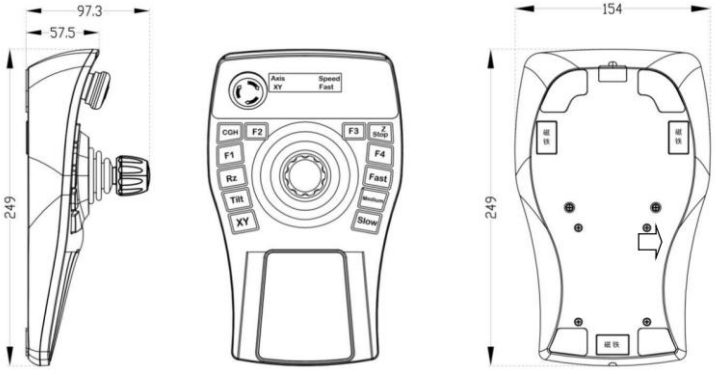

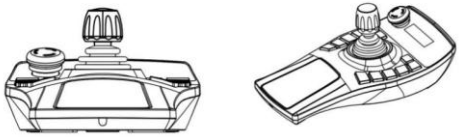

MKF-RC01

Mate wireless Joystick station for remote control

The joysticks station is suitable for the hoisting and lifting equipment through auxiliary devices and contractors. Special wireless and handiness version designed to be ideal for unsupervised or dangerous / hostile hard working condition. It can be mounted in the compact case, which is also feasible with customized design like optional buttons and variety joysticks.

- Frequency: 470.00Mhz
- 1 x Hall effect joystick, 2 x momentary push buttons, 1 x emergency button, 2 x toggle switch
- Remote control distance: 100M
- Battery: 3.7V, 5000mA
- Frequency: 470Mhz
- Automatic shutdown after 15 minutes of inactivity
- The battery can be connected for about 30 hours
- Power-on method: turn on the emergency stop switch → long press the START button for 8 seconds (bottom side) → release when the sound is heard, then short press
- START key 1 click→automatically start

Trigger switch RS-T1

- There are 2 gears and consists of 2 micro switches. This product can replace similar foreign products, adopting fully sealed waterproof switches, advanced mechanical structure, and super-position feel.
- Gear position: 2nd gear (spring automatic return)
- Safety lock: with safety lock function (optional function)
- Travel: first gear angle: 13 degrees (stroke 6mm), second gear angle: 7 degrees (stroke 3mm)
- Working force: 10N for the first gear, 25N for the second gear;
- Contact current: 30V/1A;
- Life: more than 1 million times
- Working temperature: -40℃~+75℃
- Test: Vibration 10-500hz/10g, acceleration 50g
- Protection: electrical ICE IP67

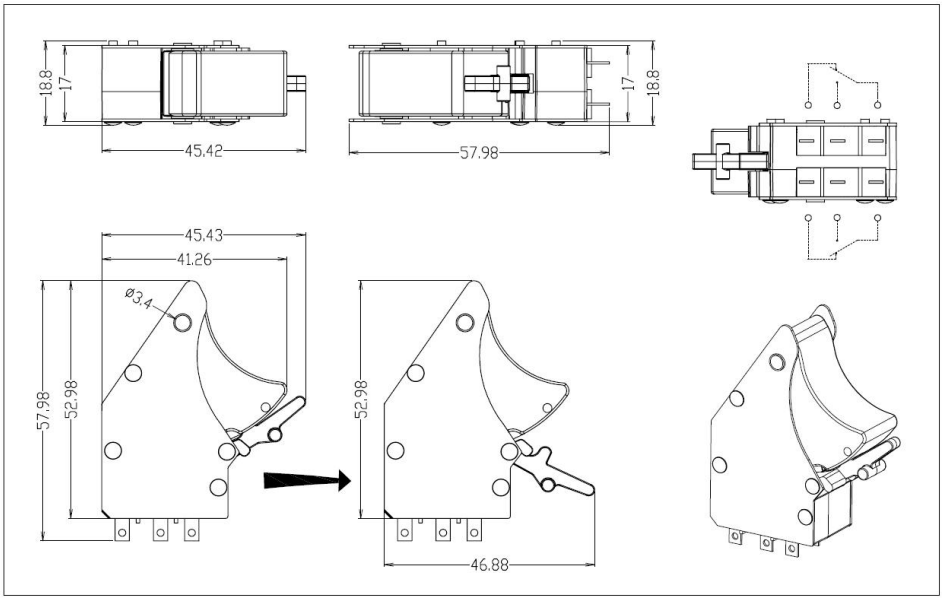

Hall linear button PB-12

PB-12 series Hall linear buttons. The spring automatically returns; linear voltage signal output, 0V when the button is released, 4.5V when it is pressed to the end, linear signal output.
Aluminum alloy housing material, imported from Germany Hall sensor, full temperature range linear compensation, multi-point linearity correction, moving parts and sensor non-contact, long life.

- Returning method: spring automatic return
- Mechanical stroke: 8mm
- Power supply: DC5-7V
- Working current: 12MA
- Signal output: analog voltage 0～4.5V (other voltage ranges can be customized)
- Life span: more than 5 million times
- Operating temperature: -40℃～+70℃
- Protection level: IP54 protection

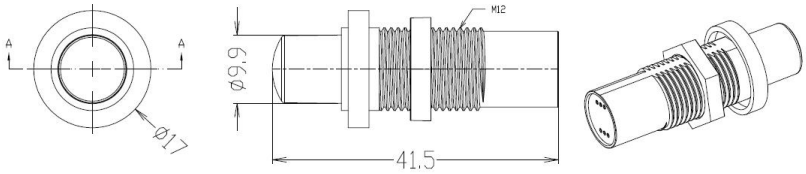

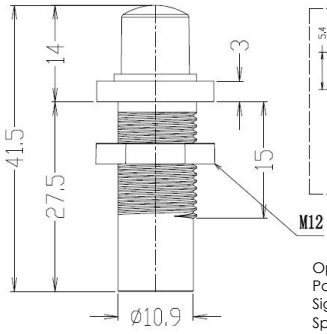

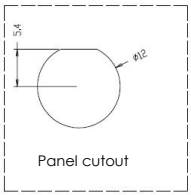

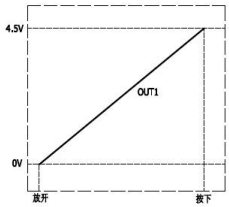

Operation travel: 8mm
Power supply: 5V
Signal output: 0-4.5V
Spring return, voltage increased when pressing down

Buttons and accessories

Cutout diameter: 12MM;

IP rate: IP67;

Lifespan: 1 million

contact capacity: 2A/DC24V

Color: Red, green, yellow, blue, black

Push-button cover (Cutout diameter: 12mm)

Material: Stainless steel 316

Buttons and accessories

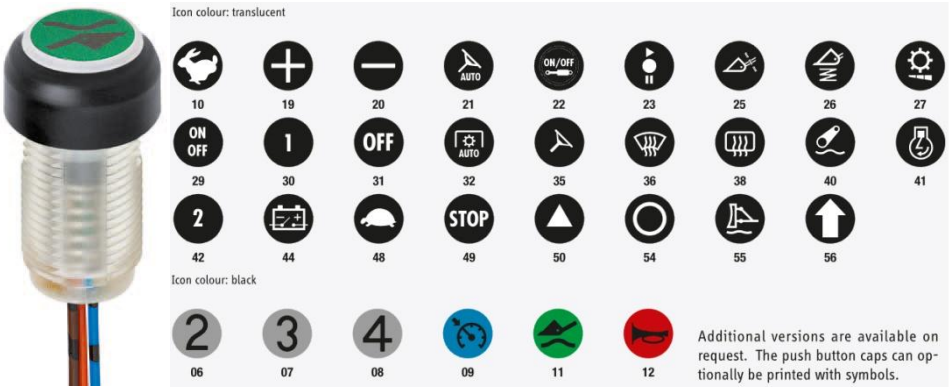

- With backlight, a variety of translucent icons
- Life span: more than 3 million times
- Mechanical stroke: 3mm
- Contact capacity: Max300mA@36V
- LED power supply: 3V/10mA
- Protection: IP67
- Temperature: -40-+85 degrees
- Mounting hole M12 with nut

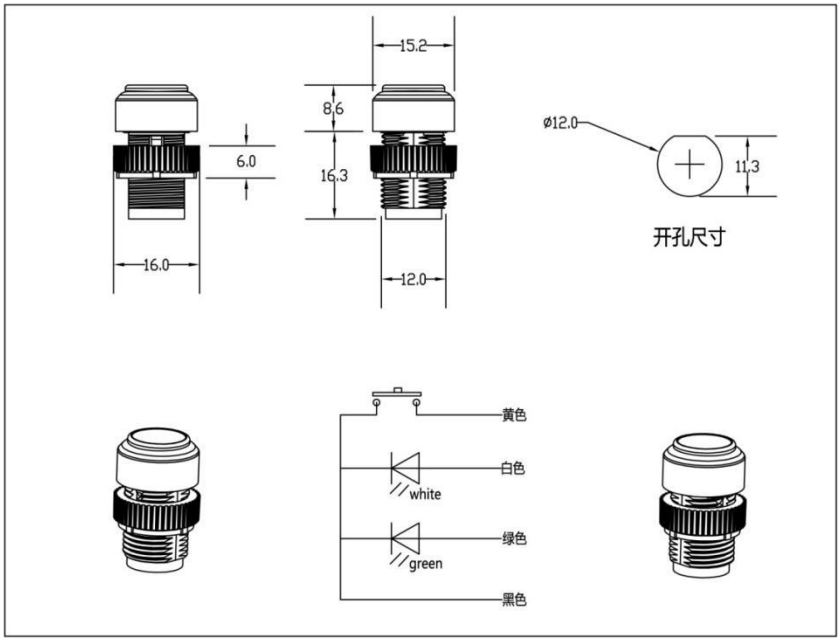

Hall knob 1

Suitable for military industry, aviation, simulator

- Sensor: Hall sensor
- Positioning: friction resistance positioning (standard configuration) 0-320°
- Spring automatic return (optional) ±36°
- Angle: 320°standard, (360°continuous optional)
- Hand feeling: scale hand feeling, smooth damping, adjustable strength
- Power supply: DC5V
- Signal output: analog voltage 0-5V
- Life span: 5 million times;
- Material: Aluminum alloy
- Operating temperature: -40℃～+70℃

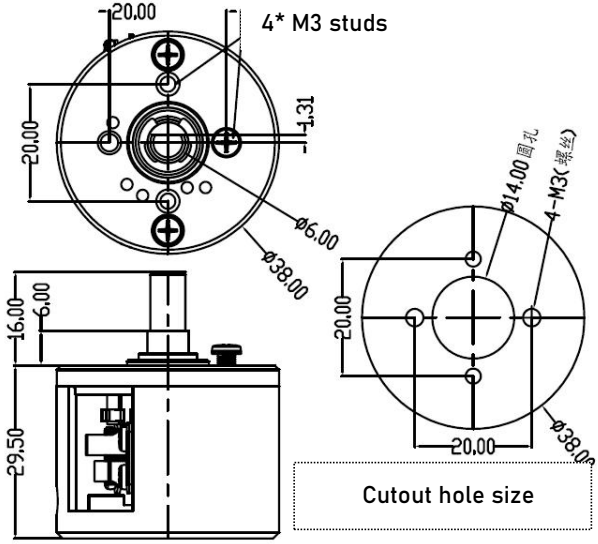

Hall knob 2

Suitable for military industry, aviation, simulator

- Material: aluminum alloy + stainless steel;
- Structure: adjustable friction hold /Smooth/medium feel optional
- Rotation angle: 300°
- Sensor: Hall sensor
- Input voltage: DC5±0.5V
- Working current: 10mA@5V
- Output signal: 0.5--4.5V linear proportional signal
- Mechanical life: more than 10 million times
- Protection class: IP67
- Working temperature: -40 ~ +70℃
- Storage temperature: -50 ~ +80℃

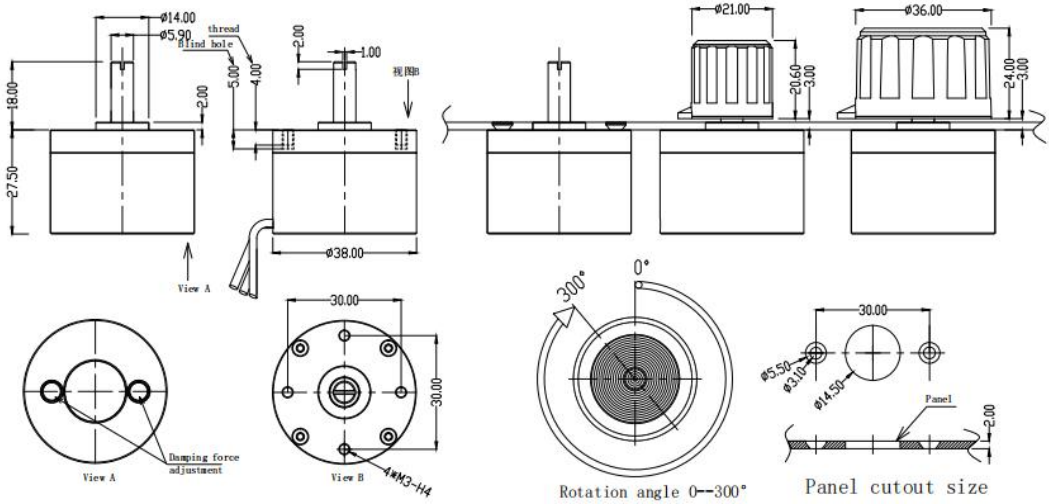

MKF-U107-EB USB Emulator board

Emulator board, USB interface, driver-free, can be recognized as a joystick in the computer, support Microsoft operating system, Linux operating system. It is suitable for simulator console, ground station, man-machine input panel interface, etc.

- Analog input (joystick): 8-axis, 10-bit precision, (0-5V signal input)
- IO input (button): 20 external buttons
- Programmable IO (indicator output): 4 output ports (for LED indicator)
- Communication interface: USB2.0, RS232, RX422 or RS485
- USB driver: USB HID protocol, no driver, only supports "joystick, mouse, keyboard" and combination mode
- Dimensions: (W)100X(L)70X(H)12
- Positioning hole size: (W)90X(L)60, through hole Ø3.0mmX4

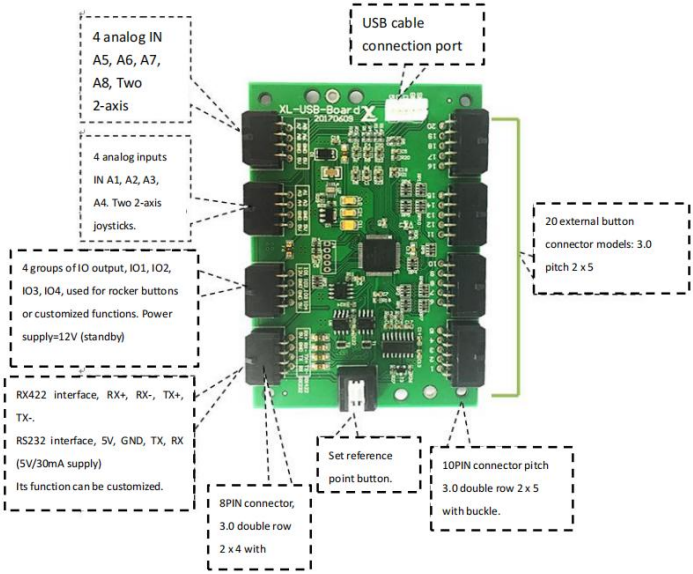

CAN Emulator board

CAN communication acquisition board, CAN interface, CAN2.0B protocol standard, supports standard frame ID and extended frame ID, user can modify ID, ID standard of CIA J1939 and CAN OPEN protocol. Supports 8 analog inputs, 20 buttons, 3 indicator lights, 1 CAN interface, and 1 RS232 interface. A control panel suitable for CNA communications.

- Analog input: 8-channel 0-5V signal input, 12-bit precision
- IO input: 20 (external button or switch)
- Indicator output: 1 power light, 1 function indicator, 2 programmable LED indicators
- Communication interface: CAN2.0 (J1939) and RS232
- Dimensions: (W)100X(L)70X(H)12
- Positioning hole size: (W)90X(L)60, through hole Ø3.0mmX4
- CAN parameters can be set (CAN communication parameters can be set through the RS232 interface)
- Support standard frame ID, extended frame ID and remote frame
- Dimensions: (W)100X(L)70X(H)12
- Positioning hole size: (W)90X(L)60, through hole Ø3.0mmX4

MKF-AP-01 Foot pedal

- Tracked vehicle accelerator pedal
- Two-way accelerator pedal
- Spring return
- Mechanical angle: ±15 degrees
- Power supply: DC5±0.5V
- Signal output: dual interleaved signal output 0.5-2.5-4.5V (Center 2.5V)
- Power supply: 32mA/@5V
- IP rate: IP66
- Cable length: 30CM Cable with DEUTSCH Connector DTM06-6P

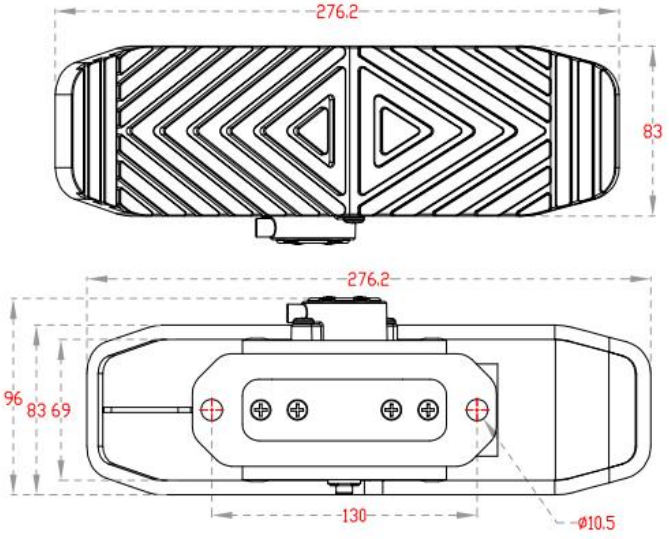

MKF-JS23 Single axis joystick series

Suitable for director switchers and industrial applications

- Single axis, Hall sensor
- Handle size: 45mm/60mm/70mm
- Positioning: friction resistance positioning (standard configuration)
- Spring automatic return (customized)
- Central gear: central mechanical gear (optional)
- Operation angle: XY axis ±38° (total 76°)
- Power supply: DC5V
- Signal output: analog voltage 0-5V, USB
- Current: 0-20MA,
- Life span: 5 million times;
- Operating temperature: -40℃～+70℃

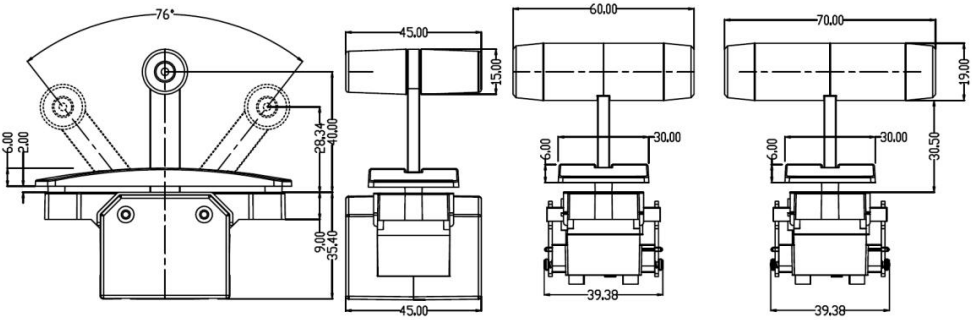

MKF-JS18 Single-axis joystick (T-BAR)

MKF-JS18 series single-axis joystick is the main accessory of video switcher products. It adopts German imported Hall sensor, full temperature range linear compensation, multi-point linearity correction, non-contact of moving parts and sensor, long life, advanced structure design and imported damping material, with good hand feeling, widely used in broadcasting TV products.

- 1 axis
- Sensor: Hall sensor
- Handle material: aluminum alloy, anodized surface
- Positioning method: friction resistance positioning
- Operation angle: 60 degrees
- Power supply: DC5V
- Power consumption: 12MA (Test conditions: 5V power supply, analog signal output)
- Signal output: analog voltage 0-5V
- Life: more than 5 million times;
- Operating temperature: -40℃～+70℃
- Protection: IP54

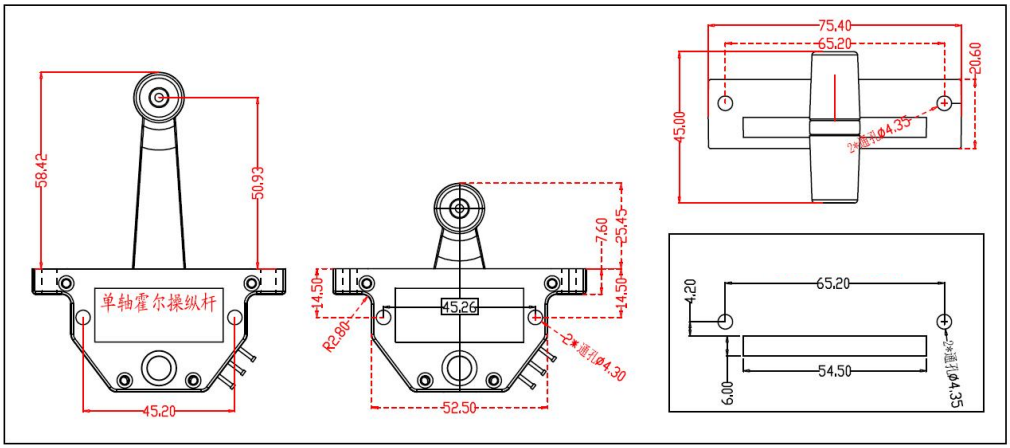

MKF-MJS-20

- USB Midi protocol, support broadcast software such as vMix, support windows, macOS operating system
- Support RS232 interface communication, support RS422 camera control
- Aluminum alloy shell, brushed panel
- 6 channels, 20 color backlight keys, the brightness of the key backlight can be adjusted
- Hall sensor push rod T-BAR, 15-level LED progress indicator
- RS232 serial port tally signal output (for connecting wireless tally transmitter)
- Dimensions: 325X118X40mm (height does not include buttons and T-BAR, the maximum height above the panel is 25mm)

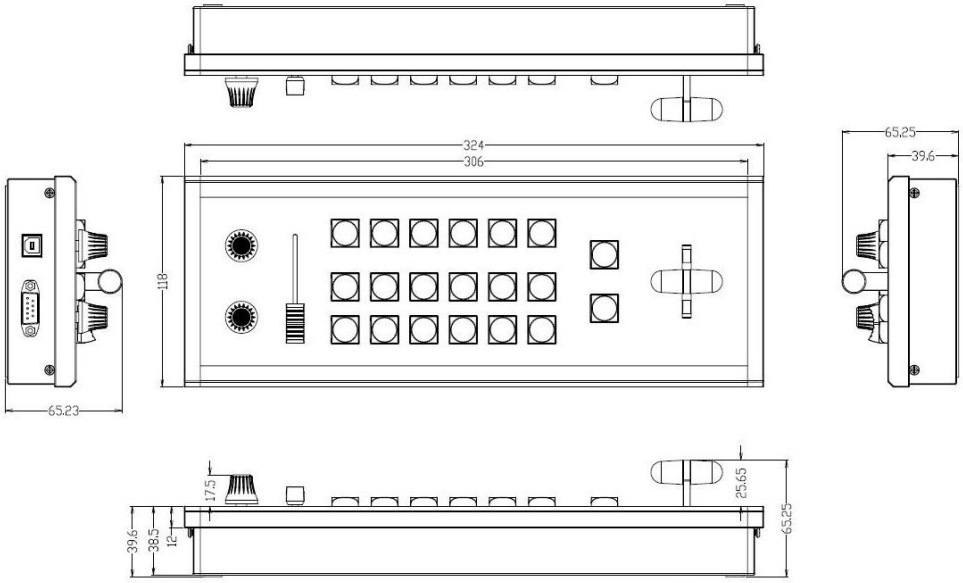

MKF-MJS-28

Aluminum alloy shell, 3-axis rugged joystick, 28 bi-color backlit buttons, suitable for camera remote control, video editing, education recording, video conference system, etc.
Support VISCA, POLYCOM, CISCO, CANON, Panasonic, PELCOD, PELCO-P and other protocols; Baud rate: 1200, 2400, 4800, 9600, 19200, 64-256 channel camera control, support mixed use of different protocols, keyboard stores 64 preset positions per channel; supports preset position cruise function.

- Joystick: 3-axis photoelectric joystick
- Display: 2 lines x 20 characters, blue backlight;
- Product size: 355(L) ×150(W) ×155(H)mm
- Weight: 1.47kg (w/o Power supply)
- Operating temperature: -20°C - 70°C
- Relative Humidity: 30% - 90% (w/o condensation)
- Power adapter: AC100-240V-12VDC/500mA
- Power: 2.7 W (not loaded line)
- Communication interface: RJ45/RS485(RS422)/ RS232/USB

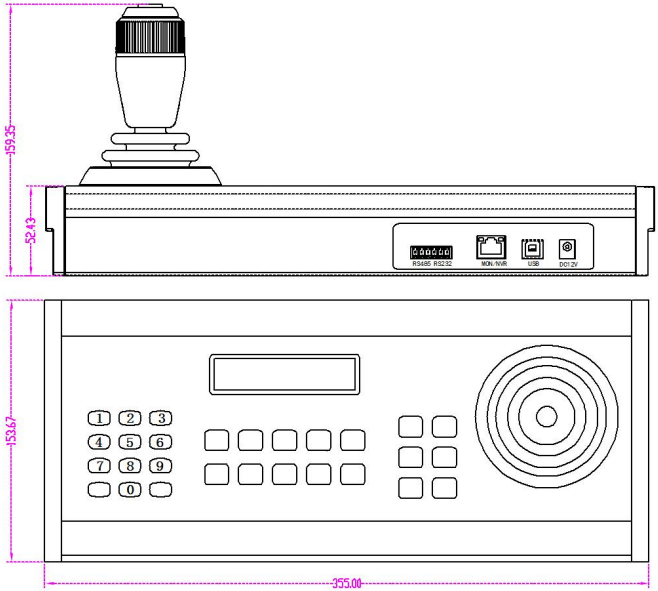

MKF-MJS-30

MKF-MJS-30A

3-axis Hall-type joystick, 30 RGB full-color backlit buttons, 2 knobs, 2.4-inch color LCD screen, suitable for camera remote control, video editing, education recording, video conference system, etc.Support VISCA, POLYCOM, CISCO, PANASONIC, PELCOD, PELCO-P and other protocols; support central control forwarding function (central control and keyboard control the camera at the same time), support USB HID protocol, plug and play.

MKF-MJS-30B

- Joystick: 3-axis Hall joystick
- Keys: 30 RGB full-color backlit buttons
- Knob: 2 knobs, 15-level LED progress indicator
- Display: 2.4-inch color LCD screen;
- Operating temperature: -20°C - 70°C
- Power adapter: AC100-240V-12VDC/500mA
- Communication interface: RJ45/RS485(RS422)/ RS232/USB

MKF-MJS-40

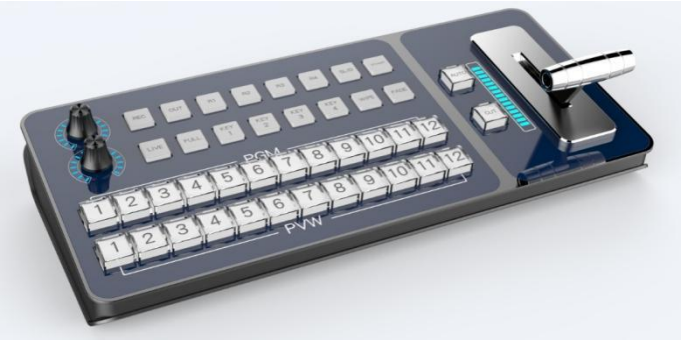

MKF-MJS-40A

MKF-MJS-40 video switcher is suitable for audio and video editing and live broadcast system, recording and broadcasting system.USB Midi protocol, support broadcast software such as vMix, support windows, macOS operating systems, support RS232 interface communication, support RS422 camera control TALLY interface. Provide free OEM service.

MKF-MJS-40B

- T-BAR Hall single-axis push rod (15-level progress indicator)
- 42 full-color buttons, each button has an independent RGB full-color backlight (software color matching)
- 2 knobs (encoder, with push-down switch), 15-level LED indication
- External interface: 1 RS232 (DB9 pin) communication port, 1 RS422 communication port,
- USB (plug & play) 1, RJ45 (spare) TALLY interface: TALLY (DB25 pin)
- Power supply: DC12V, there is a power switch at the rear
- Dimensions: 164 x 354 x 51mm (excluding rocker and knob size)

MKF-MJS-44

MKF-MJS-44 video switcher is suitable for audio and video editing and live broadcast system, recording and broadcasting system.

USB Midi protocol, support broadcast software such as vMix, support windows, macOS operating system, support RS232 interface communication, support RS422 camera control

- USB Midi protocol, support broadcast software such as vMix, support windows, macOS operating system
- Support RS232 interface communication, support RS422 camera control
- T-BAR Hall single-axis push rod (15-level progress indicator)
- 44 full-color buttons, each button has an independent RGB full-color backlight (software color matching)
- 11 knob potentiometer
- 3-axis Hall joystick
- External interface: 1 RS232 (DB9 pin) communication port, 1 RS422 communication port,
- USB (drive-free) 1, RJ45 (spare) TALLY interface: TALLY (DB25 pin)
- Power supply: DC12V, there is a power switch at the rear;
- Dimensions: 164 x 354 x 51mm (excluding rocker and knob size)

MKF-MJS-63

The video switcher is suitable for audio and video editing and live broadcast systems, recording and broadcasting systems.USB Hid, Midi protocol, support broadcast software such as vMix, support windows, macOS operating system, support RS232 interface communication, support RS422 camera control.

- Joystick: Hall type three-axis joystick
- T-type fader: Hall type T-type video fader, LED progress indicator
- Keys: 63 imported bi-color buttons
- Volume adjustment: 4-way audio mediation
- Power supply: DC12V/500Ma
- Communication interface: USBX1, RS232X1, RS422X1
- Static weight: 3.0KG
- Gross weight: 4.35KG
- Product size: 400X220X114mm
- Outer box size: 47x28x20cm

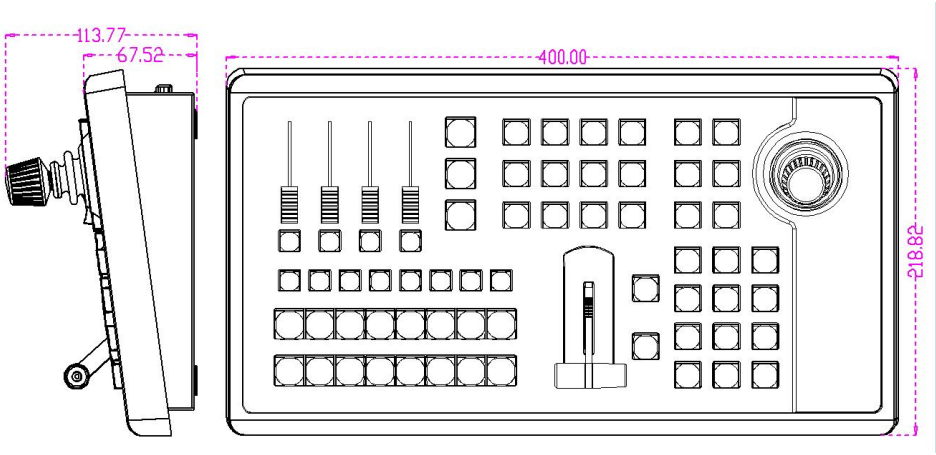

MATE TECHNOLOGY SHENZHEN LIMITED

MADE BY PROFESSIONAL

ADDRESS: 411, Bld. 1A, Zhida Industrial Park, Longgang District, Shenzhen, Guangdong Province, P.R China

Zip code: 518000

TEL/FAX: 86-755-8939 8907

EMAIL: info@matend.com

WEB: www.matend.com