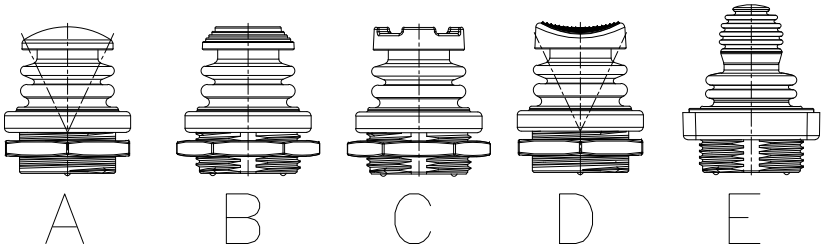
A
B
C
D
E

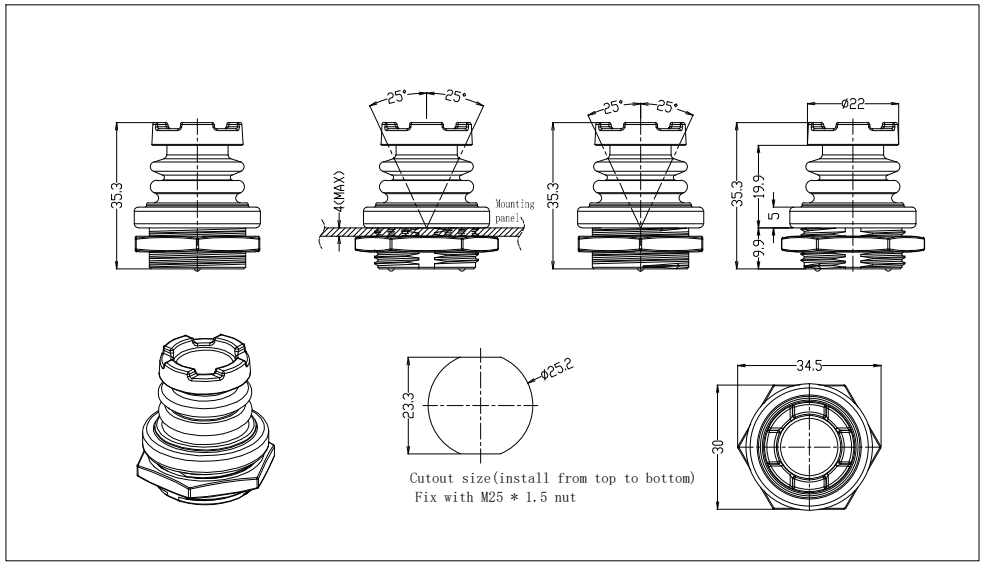
35.3
25°
25°
4(MAX)
Mounting panel
35.3
25°
25°
35.3
Ø22
19.9
5
9.9
Ø25.2
23.3
34.5
30
Cutout size(install from top to bottom)
Fix with M25 * 1.5 nut

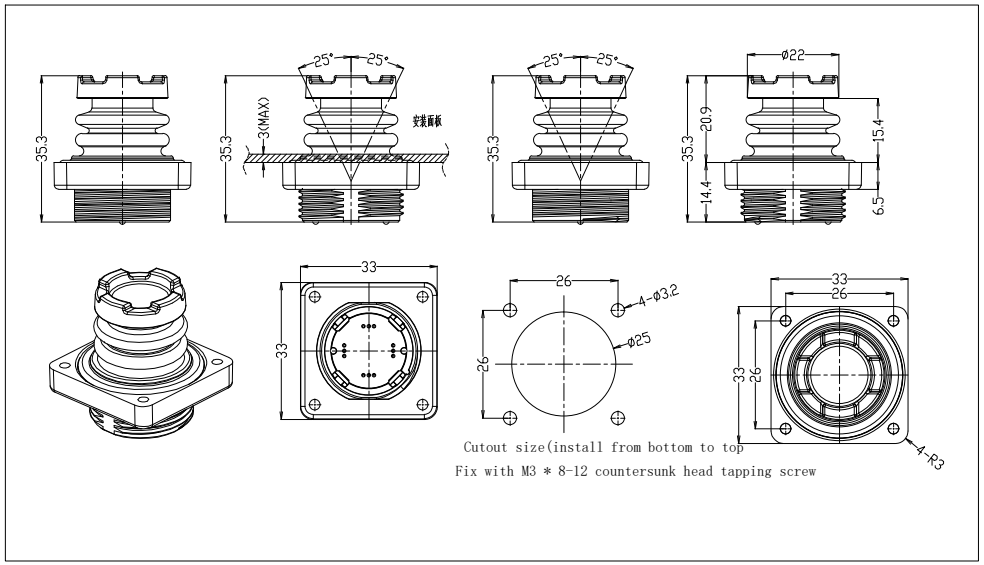
35.3
25°
25°
35.3
3(MAX)
安装面板
35.3
25°
25°
Ø22
35.3
20.9
14.4
15.4
6.5
33
33
26
4-Ø3.2
Ø25
26
33
26
33
26
4-R3
Cutout size(install from bottom to top
Fix with M3 * 8-12 countersunk head tapping screw